Grundfos UP XL

Maintenance-free circulators with insulating shell (if equipped)

Installation and operating instructions

3191277

Conforms to UL STD 778
Certified to CSA STD C22.2 No. 108

be
think
innovate

GRUNDFOS

English (US) Installation and operating instructions

Original installation and operating instructions

CONTENTS

		Page
1.	**Symbols used in this document**	**2**
2.	**Limited warranty**	**3**
3.	**Safety warning**	**4**
3.1	Read this booklet	4
3.2	Electrical work	4
4.	**Pre-installation checklist**	**4**
4.1	Confirm you have the correct pump	4
4.2	Check the condition of the pump	4
4.3	Verify electrical requirements	5
4.4	Pumped liquid requirements	5
5.	**Installation procedures**	**6**
5.1	Piping considerations	6
5.2	Changing the terminal box position	7
5.3	Electrical connection	8
5.4	Insulating shells (if equipped)	9
6.	**Starting the pump**	**10**
6.1	Vent the piping system	10
6.2	Speed selection	10
7.	**Fault finding**	**11**
7.1	Fault finding chart	11
7.2	Preliminary checks	12
7.3	Current measurement	12
7.4	Insulation resistance (lead-to-ground)	13
7.5	Winding resistance (line-to-line)	13
7.6	Resistance tables	13
8.	**Replacing components**	**14**
8.1	Removing the pump head	14
8.2	Fitting the pump head	15
8.3	Replacing the terminal box or capacitor	16
9.	**Additional technical data**	**17**
10.	**Disposal**	**17**

Warning

Prior to installation, read these installation and operating instructions. Installation and operation must comply with local regulations and accepted codes of good practice.

1. Symbols used in this document

Warning

If these safety instructions are not observed, it may result in personal injury.

Warning

If these instructions are not observed, it may lead to electric shock with consequent risk of serious personal injury or death.

Warning

The surface of the product may be so hot that it may cause burns or personal injury.

Note

Notes or instructions that make the job easier and ensure safe operation.

Caution

If these safety instructions are not observed, it may result in malfunction or damage to the equipment.

2. Limited warranty

Products manufactured by GRUNDFOS PUMPS CORPORATION (Grundfos) are warranted to the original user only to be free of defects in material and workmanship for a period of 36 months from date of manufacture. Grundfos' liability under this warranty shall be limited to repairing or replacing at Grundfos' option, without charge, F.O.B. Grundfos' factory or authorized service station, any product of Grundfos' manufacture. Grundfos will not be liable for any costs of removal, installation, transportation, or any other charges which may arise in connection with a warranty claim.

Products which are sold but not manufactured by Grundfos are subject to the warranty provided by the manufacturer of said products and not by Grundfos' warranty. Grundfos will not be liable for damage or wear to products caused by abnormal operating conditions, accident, abuse, misuse, unauthorized alteration or repair, or if the product was not installed in accordance with Grundfos' printed installation and operating instructions.

To obtain service under this warranty, the defective product must be returned to the distributor or dealer of Grundfos' products from which it was purchased together with proof of purchase and installation date, failure date, and supporting installation data. Unless otherwise provided, the distributor or dealer will contact Grundfos or an authorized service station for instructions. Any defective product to be returned to Grundfos or a service station must be sent freight prepaid; documentation supporting the warranty claim and/or a Return Material Authorization must be included if so instructed.

GRUNDFOS WILL NOT BE LIABLE FOR ANY INCIDENTAL OR CONSEQUENTIAL DAMAGES, LOSSES, OR EXPENSES ARISING FROM INSTALLATION, USE, OR ANY OTHER CAUSES. THERE ARE NO EXPRESS OR IMPLIED WARRANTIES, INCLUDING MERCHANTABILITY OR FITNESS FOR A PARTICULAR PURPOSE, WHICH EXTEND BEYOND THOSE WARRANTIES DESCRIBED OR REFERRED TO ABOVE.

Some jurisdictions do not allow the exclusion or limitation of incidental or consequential damages and some jurisdictions do not allow limit actions on how long implied warranties may last. Therefore, the above limitations or exclusions may not apply to you. This warranty gives you specific legal rights and you may also have other rights which vary from jurisdiction to jurisdiction.

3. Safety warning

3.1 Read this booklet

This booklet is designed to help a certified installer to install, begin operation of, and troubleshoot the Grundfos Small UP and UPS pumps.

Following the instructions will ensure safe, trouble-free operation.

This booklet should be left with the owner of the pump for future reference and information regarding its operation. Should the owner experience any problems with the pump, a certified professional should be contacted.

3.2 Electrical work

All electrical work should be performed by a qualified electrician in accordance with the latest edition of the National Electrical Code, local codes and regulations.

Warning

A faulty motor or wiring can cause electrical shock that could be fatal, whether touched directly or conducted through standing water. For this reason, proper grounding of the pump to the power supply's grounding terminal is required for safe installation and operation.

In all installations, the above-ground metal plumbing should be connected to the power supply ground as described in the National Electrical Code. All wiring must comply with the National Electrical Code, state, and local regulations.

4. Pre-installation checklist

4.1 Confirm you have the correct pump

- Read the pump nameplate to ensure it is the one you ordered.
- Compare the pump's nameplate data and its performance curve (for head, gpm, etc.) with the application in which you plan to install it.
- Will the pump do what you expect it to do?

4.1.1 Pump to system type recommendations

- **Open** systems (i.e. potable water): Stainless steel or bronze volute (pump housing) only.
- **Closed** systems (i.e. airless, non-potable water): Cast iron, stainless steel, or bronze volute (pump housing).

Other considerations regarding Grundfos small UP and UPS pumps:

- These pumps are intended for indoor use only.
- If installed outdoors the pump must be protected by an appropriate, well ventilated, water-tight enclosure to keep out moisture and dirt.
- Minimum ambient temperatures must be no lower than 33 °F (1 °C).
- For ambient and fluid temperature see sections *4.4 Pumped liquid requirements* and *9. Additional technical data*.

4.2 Check the condition of the pump

The pump's shipping carton is specially designed around the pump during production to prevent damage.

As a precaution, it should remain in the carton until you are ready to install it. At that point, look at the pump and examine it for any damage that may have occurred during shipping.

Examine any other parts of the shipment as well for any visible damage. Once the pump has been removed from the box, care should be taken NOT to drop or mishandle the pump.

Box contents:

- one pump
- two gaskets (flanged units only)
- one Installation and Operation Instruction (I&O).

4.3 Verify electrical requirements

Verify the electrical supply to be certain the voltage, phase and frequency match that of the pump motor. The proper operating voltage and other electrical information can be found on the pump nameplate.

This pump's motor is designed to run on ± 10 % of the nameplate-rated voltage.

4.4 Pumped liquid requirements

Warning

The Grundfos Small UP/UPS pump is intended for use with water only. The pump must not be used for the transfer of flammable liquids such as diesel oil, gasoline, and similar liquids.

The pump is not for pool or marine use.

The pump can be used to circulate:

- Potable hot water.
- Water containing glycol for hydronic heating (see section *9. Additional technical data* for additional limitations).
- Cooling water.

In domestic hot-water systems it is advisable to use stainless steel pump housing versions of this pump.

All pump types (stainless, bronze or cast iron pump housing) should not be used in water with a degree of hardness lower than 14 grains per gallon of hardness.

Fluids should be clean and should not contain solid particles, fibers, or mineral oils.

If the pump is installed in a heating system, the water should meet the requirements of accepted standards on water quality in heating systems.

The fluid should not contain solid particles, fibers, or mineral oils.

The pump is lubricated and cooled by the liquid being pumped. Therefore, the pumped liquid must always be allowed to circulate through the pump.

Extended periods without circulation will cause premature wear to the bearings and excessive motor heat.

The pumped liquid must meet the temperature requirements listed in the following charts.

Note: Fluid must never be allowed to freeze during non-operational periods.

Open systems (domestic, potable hot water)		
	Fluid	**Ambient**
Min.	36 °F (2 °C)	33 °F (1 °C)
Max.	< 149 °F (65 °C)	100 °F (38 °C)

Caution: In domestic hot-water systems, it is recommended to keep the liquid temperature below 149 °F (65 °C) to eliminate the risk of lime precipitation.

Closed systems (non-potable heating or cooling airless fluid)			
	Pump models	**Liquid**	**Ambient**
Min.	**All**	36 °F (2 °C)	33 °F (1 °C)
Max.	**UPS 26-150**	230 °F (110 °C)	100 °F (38 °C)
	UPS 43-100	230 °F (110 °C)	100 °F (38 °C)
	UPS 50-60	212 °F (100 °C)	100 °F (38 °C)

Water and glycol mix	
Max.	50 % glycol at 15 °F (-9.5 °C) liquid
(Hydraulic performance change can be expected.)	

5. Installation procedures

Warning

Never make any connections in the pump terminal box unless the electrical supply has been switched off.

The pump should not be connected to the electrical system until it has been properly installed in the piping system.

Warning

Risk of electrical shock - this pump has not been investigated for use in swimming pool or marine areas.

5.1 Piping considerations

When making piping connections, be sure to follow the piping manufacturer's recommendations and all code requirements for piping material.

Thoroughly clean and flush all dirt and sediment from the system before attempting to install the pump.

5.1.1 Location in the piping line

The pump should never be located at the lowest point of the piping system (where dirt and sediment collect), nor should it be located at the highest point of the piping system (where air accumulates).

Warning

The pump must be positioned so that someone cannot accidentally come into contact with the hot surfaces of the pump.

When installing the pump into the piping system, Grundfos recommends that pressure gauges be installed in the inlet and discharge flanges or pipes. This will allow the pump and system performance to be checked.

Do not block the pipe plugs in the pump housing flanges by locating the terminal box over these plugs.

5.1.2 Mounting positions

The arrows on the pump housing indicate the direction of water flow. The pump may be installed in vertical or horizontal piping, **but the motor shaft must always remain horizontal**, as shown in fig. 1.

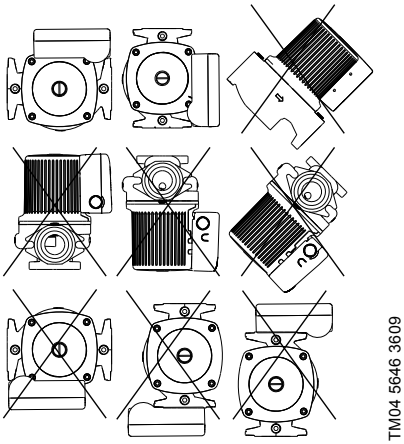

Fig. 1 Installation positions

5.1.3 Terminal box positions

At the bottom of the stator, closest to the pump housing, there are three drain holes to allow condensed water to escape. The drain holes shall not be blocked for any reason and one drain hole must always point downward.

There is not a drain hole directly below the terminal box; therefore the terminal box must be positioned in one of the positions shown in fig. 1 or fig. 2.

5.2 Changing the terminal box position

Warning

Before starting any work on this circulator, be sure electrical supply has been switched off and it cannot be accidentally switched on.

If the pump is already installed in the system, the system must be drained or the isolation valves on both sides of the pump must be closed and the pressure released/relieved by removing the vent plug.

Warning

Exercise caution when draining the system or removing the vent plug as the fluid in the system may be scalding hot and under pressure.

Only after the pressure has been relieved and the pump drained should you proceed with the next steps.

5.2.1 Rotating the terminal box

To change the position of the terminal box, follow these steps:

1. Remove the four (5 mm) allen-head screws holding the pump head onto the pump housing.
2. Carefully lift/slide the pump head out and away from the pump housing. Next rotate the pump head and locate the terminal box in the desired position. The terminal box can be rotated in steps of 90 °. Review fig. 1 and fig. 2 for possible/permissible positions. **DO NOT** locate the terminal box beneath the pump.

Caution

Use caution as the rotor assembly can fall out of the pump head or pump housing if the pump head is pulled too far away from the pump housing.

3. Make sure the O-ring is properly seated in the pump housing.
4. Replace the pump head onto the pump housing.
5. Diagonally tighten the 5 mm allen-head screws evenly. **Torque to: 7 ft lbs. / 9.5 Nm**.
6. Check to ensure the rotor turns freely. Do this by removing the vent plug in the middle of the pump nameplate. Insert a medium-size, flat-blade screwdriver into the slot at the exposed end of the shaft. Gently turn the shaft. If it does not turn easily, repeat steps 1 through 5 above. If the rotor spins freely, proceed to step 7. Do not put the vent plug back into the pump until the end of step 9.
7. The position of the nameplate can be changed by easing the outer edge of the plate at the cutout with a screwdriver. Turn the nameplate to the required position and push into place.
8. Follow electrical instructions in section *5.3 Electrical connection*.
9. Refill the system, open the isolation valves and vent the system. Also allow air to vent out of the pump; once water flows out the vent hole, replace the vent plug removed in step 6. See additional instructions in section *6.1 Vent the piping system*.
10. Figure 2 shows acceptable terminal box positions along with recommended drip loops (dashed lines) in the electrical wiring harness based on entry point.

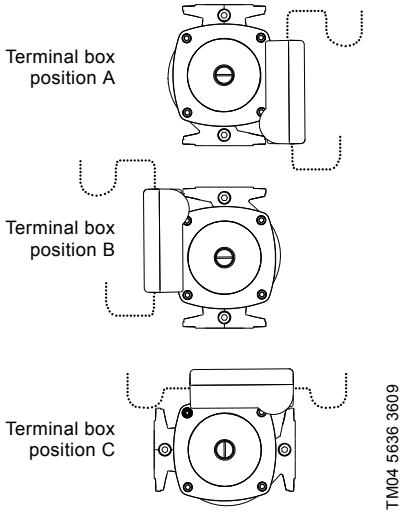

Fig. 2 Acceptable terminal box positions

5.3 Electrical connection

Warning

Risk of electrical shock! The electrical connection and protection should be carried out in accordance with the latest edition of the National Electrical Code, local codes and regulations by a qualified electrician.

The safe operation of this pump requires that it be grounded in accordance with the National Electrical Code and any state, local governing codes and regulations.

Ground wires should be copper conductors of at least the size of the circuit conductor supplying power to the pump. Connect the ground wire to the grounding point in the terminal box and then to an acceptable ground. Do not ground to gas or water supply line.

All wire sizes should be copper and size-based on the ampacity (current carrying properties of a conductor) as required by the National Electrical Code or local regulations. Additionally UL requires the following wire sizes to be used: 18-12 Solid or 14-12 Stranded.

Both the power and grounding wires must be suitable for at least 194 °F (90 °C).

Proper operating voltage and other electrical information can be found on the pump nameplate attached to the top of the motor.

- The motor is thermally protected on all three speeds and no additional external protection is needed.
- See fig. 3 for proper grounding and supply power connection locations (115 V and 208-230 V).
- The terminal connections are toggle/lever push design. Push the lever down and insert the field wiring. Push the lever down and pull to remove wires.
- Next, use care when installing the terminal box cover with speed switch. Insert the Phillips head screw through the cover and tighten to a snug fit.
- An external "Drip Loop" is recommended in the electrical wiring harness; see fig. 2.
- Where an external "Drip Loop" is not possible, or if the wiring enters through the upward facing (top) surface of the box, then an internal "Drip Loop" is recommended; see fig. 3.

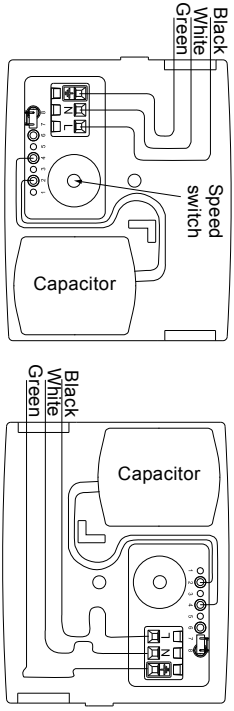

Fig. 3 Examples of ground and power supply connections (115 V and 108-230 V) with internal drip loop

5.4 Insulating shells (if equipped)

For pumps with provided insulation shell, the following procedures are required to insure safe and proper installation.

1. Pump and mating piping flange bolts need to be installed towards the pump as illustrated in fig. 4.
2. Apply water proof, heat resistant, silicon based sealant to insulation shell. Care should be taken to not block weep slots for pump motor when applying sealant. Failure to follow proper sealant location procedures could damage motor and insulation shell. See fig. 5 for proper locations when applying sealant.
3. Mate the two insulation shells over the pump volute as illustrated in fig. 6. If the shells do not mate; flange bolts are installed in the wrong direction, review step one and or switch mating shell location.
4. Proper amount of time should be allowed for sealant to set-up before any additional installation work is performed. See sealant manufactures recommended time for sealant set-up. See fig. 7 for final configuration.

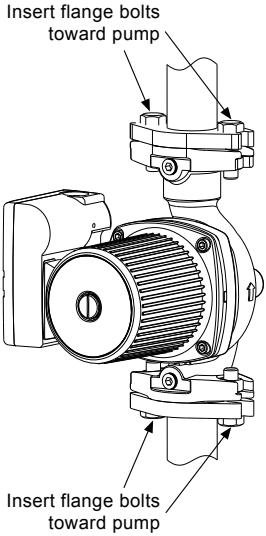

TM05 1888 2515

Fig. 4 Connect pump to piping, installing flange bolts toward the pump

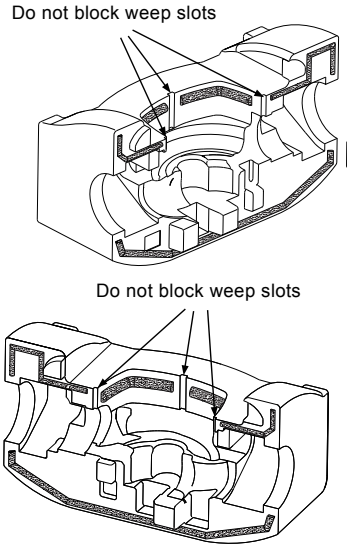

TM05 1889 3811

Fig. 5 Applying silicon sealant (dotted areas indicate sealant)

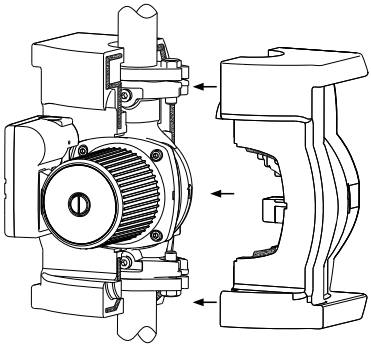

TM05 1890 2515

Fig. 6 Insulating shell installation (dotted areas indicate sealant)

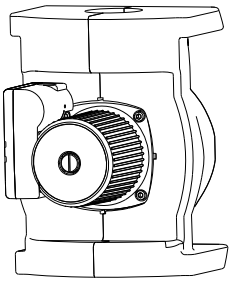

TM05 1891 2515

Fig. 7 Ready for insulation wrap

6. Starting the pump

6.1 Vent the piping system

After the pump has been installed and the electrical connections made, the piping system must be vented.

Caution Never operate the pump dry - the system must first be filled with liquid and vented.

NOTE: Do not vent the piping system through the pump. Instead, follow these steps:

1. Fill and pressurize the system with liquid, and vent all trapped air from the piping by suitable means.
2. If any isolation valves are used, make sure they are OPEN.

Warning

If the vent screw/plug is to be loosened, care should be taken to ensure that the escaping scalding hot liquid does not cause personal injury or damage to components.

3. Vent the pump by removing the vent plug. When water exists through the port, the pump is fully vented / primed.
4. Reinstall the vent plug.

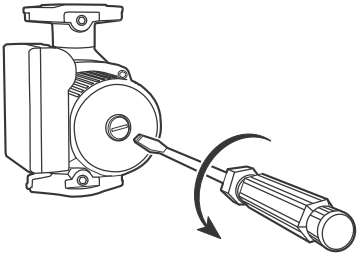

Fig. 8 Vent screw/plug removal for pump venting

6.2 Speed selection

UPS models

Speeds can be changed via the speed switch on the terminal box cover. Power must be turned off before changing speeds. The speed in the three positions appears in the following table; also see fig. 10.

UP models

Speed is fixed on Speed 3 (High) and cover does not have a switch (cover is solid).

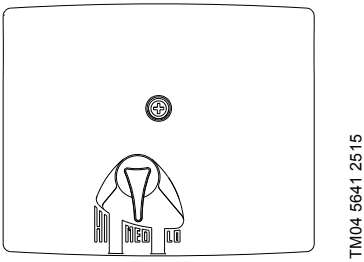

Fig. 9 Terminal box cover with speed switch in medium speed (Speed 2)

Switch position	Speed in % of max. speed
Low (Speed 1)	approx. 60 %
Medium (Speed 2)	approx. 80 %
High (Speed 3)	100 %

Changing to lower speeds offers considerable reduction in energy consumption and less noise in the system.

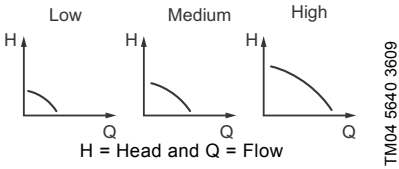

Fig. 10 Pump performance at speed settings

7. Fault finding

7.1 Fault finding chart

Warning

Before removing the terminal box cover, make sure that the electrical supply has been switched off and that it cannot be accidentally switched on.

Warning

The pumped liquid may be scalding hot and under high pressure. Before any removal or dismantling of the pump, the system must be drained or the isolation valves on both sides of the pump must be closed.

Fault	Cause	Remedy
1. The pump does not run.	a) External circuit breaker is switched off.	Switch the circuit breaker on.
	b) Current-/voltage-operated ground fault circuit interrupter has tripped.	Repair the insulation defects and reset the interrupter.
2. The pump does not run.	a) Rotor is blocked.	Switch off the electrical supply and clean/repair the pump.
	b) The speed switch is not fully positioned (is between speeds)	Switch off the electrical supply at the external circuit breaker and change speed switch into position.
	c) The pump has been cut out by the thermal overload switch due to high liquid temperature.	Check that the liquid temperature falls within the specified range. The pump will restart automatically when it has cooled to normal temperature.
3. Noise in the system.	a) Air in the system.	Vent the system.
	b) The pump flow is too high.	Reduce the pump performance.
	c) The pressure is too high.	Reduce the pump performance.
4. Noise in the pump.	a) Air in the pump.	Vent the pump.
	b) The inlet pressure is too low.	Increase the inlet pressure and/or check the air volume in the expansion tank (if installed).
5. Insufficient heat in some places in the heating system.	a) The pump performance is too low.	Increase the pump performance, if possible. Flow too fast through the boiler/heat exchanger may not allow for the proper BTU transfer to the fluid. If fluid is too slow, fluid may be cooling too much before returning from the system. If changing speeds does not resolve the problem, replacing the pump with a properly sized pump may be required.
	b) The performance is too high.	

7.2 Preliminary checks

Supply voltage

To check the voltage being supplied to the motor, use a voltmeter.

Warning

Be careful, since power is still being supplied to the pump. Do not touch the voltmeter leads together while they are in contact with the power lines.

Single-phase motors

Touch one voltmeter lead to each of the lines supplying power to the pump as shown in fig. 11:

- L and N for 115 V and 208-230 V circuits ($L = L_1$ and $N = L_2$ for 208-230 V circuits in the US)

These tests should give a reading of full line voltage.

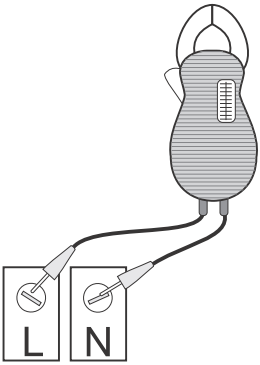

TM04 5645 3609

Fig. 11 Testing with voltmeter

Evaluation

When the motor is under load, the voltage should be within 10 % (+ or -) of the nameplate voltage.

Any variation larger than this may indicate a poor electrical supply and can cause damage to the motor windings. The motor should not be operated under these conditions. Contact your power supplier to correct the problem or change the motor to one requiring the voltage you are receiving.

7.3 Current measurement

To check the current using an ammeter, follow these steps:

1. Make sure the pump is operating.
2. Set the ammeter to the proper scale.
3. Place the tongs of the ammeter around the leg to be measured.
4. Compare the results with the amp draw information on the motor nameplate.
5. Repeat for the other legs.

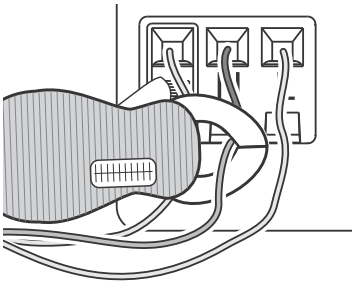

TM04 5639 3609

Fig. 12 Current measurement

Evaluation

If the current draw exceeds the listed nameplate amps, or if the current imbalance is greater than 5 % between each leg, then check the following:

- The voltage supplied to the pump may be too high or too low.
- The terminals/wires in the terminal box or to circuit breaker may be loose.
- The contacts on the motor starter may be burned.
- The terminals in the starter or terminal box may be loose.
- There may be a winding defect. Check the winding and insulation resistance; see section *7.6 Resistance tables*.
- The motor windings may be shorted or grounded.
- The pump may be damaged in some way and may be causing a motor overload.
- A voltage supply problem may exist.

7.4 Insulation resistance (lead-to-ground)

To check the insulation resistance (lead-to-ground) of the motor and leads, use a megohmmeter and follow these steps:

1. Turn the POWER OFF.
2. Disconnect all electrical leads to the motor.
3. Set the scale selector on the megohmmeter to R x 100K, touch its leads together, and adjust the indicator to zero.
4. Touch the leads of the megohmmeter individually to each of the motor leads and to ground (i.e. L to ground; N to ground, etc.).

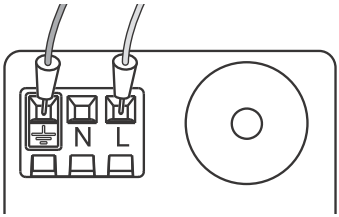

TM04 5638 3609

Fig. 13 Insulation resistance measurement

Evaluation

The resistance values for new motors must exceed 1,000,000 ohms. If they do not, replace power head.

7.5 Winding resistance (line-to-line)

To check the winding resistance of the motor windings, use a megohmmeter and follow these steps.

1. Turn the POWER OFF.
2. Disconnect all electrical leads to the motor.
3. Set the scale selector on the megohmmeter to R x 1, touch its leads together and adjust the indicator to zero.
4. Using the charts in section *7.6 Resistance tables* for reference, touch the leads of the megohmmeter to the appropriate pair of connectors. Check all pairs that are present and write down and label (RA1, RS1, RS2) all readings.
   – In T-box at L & N: UP will = Speed 3/High
   – In T-box at L & N: UPS value depends on the selected speed (Speed 1, 2, or 3)
   – For both UP and UPS: with the terminal box removed, check all combinations RA, S1, S2.
5. Compare your readings to the matching model, phase and voltage listed in the charts in section *7.6 Resistance tables*.

Evaluation

The resistance values must fall within the tolerances listed in section *7.6 Resistance tables*. If they do not, replace the power head.

7.6 Resistance tables

Checking connections in the terminal box at the power connections L and N; see fig. 14 for 115 V and 208-230 V.

Connection			Ohm value range	Nominal
115 V	L to N (Speed 3)	=	6.9 - 8.01	7.55
	L to N (Speed 2)	=	9.7 - 11.38	10.54
	L to N (Speed 1)	=	12.97 - 15.23	14.10

Connection			Ohm value range	Nominal
208 V - 230 V	L to N (Speed 3)	=	34.63 - 40.66	37.65
	L to N (Speed 2)	=	41.57 - 48.81	45.19
	L to N (Speed 1)	=	56.67 - 66.53	61.60

* T can only be checked with the terminal box removed; if the thermiks is open the pump will not run.

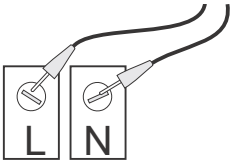

TM04 5633 3609

Fig. 14 Power connections L and N

Checking at the pin connection behind the terminal box (see section *8.3 Replacing the terminal box or capacitor* for terminal box removal):

Stator pin connection	Winding groups
1 to 2	RA: Main winding
4 to 5	RS_1: Auxiliary winding
6 to 7	RS_2: Auxiliary winding
2 to 8	T: Thermiks

Connection			Ohm value range	Nominal
115 V	RA (1 to 2)	=	6.7 - 7.9	7.3
	RS_1 (4 to 5)	=	3.0 - 3.6	3.3
	RS_2 (6 to 7)	=	3.0 - 3.6	3.3
	T (2 to 8)	=	0	

Connection			Ohm value range	Nominal
208 V - 230 V	RA (1 to 2)	=	30.4 - 35.6	33
	RS_1 (4 to 5)	=	12.0 - 14.0	13
	RS_2 (6 to 7)	=	12.0 - 14.0	13
	T (2 to 8)	=	0	

Figure 15 shows terminal plug-in stator relationship to the top / nameplate end of the stator.

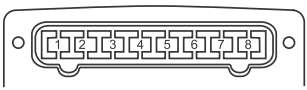

TM04 5643 3609

Fig. 15 Stator socket

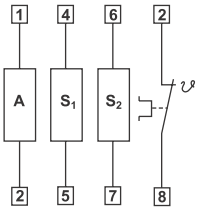

TM04 5637 3609

Fig. 16 Internal wiring

8. Replacing components

Warning

Before starting any work on this circulator, make sure electrical supply has been switched off and that it cannot be accidentally switched on.

8.1 Removing the pump head

1. Disconnect or TURN OFF the power supply.
2. Close any isolating valves on either side of the pump to avoid draining the system of liquid.
3. Remove the vent plug to relieve any system pressure retained in the pump. **Exercise caution as the fluid may be scalding hot and under pressure.** Only after the pressure has been relieved and the pump drained should you proceed with the next steps.
4. Disconnect the electrical leads from the terminal box.
5. Disconnect and remove the conduit from the terminal box.
6. Loosen and remove the four 5 mm allen-head screws which connect the pump head housing to the pump housing.
7. Remove the pump head from the pump housing. **Exercise care as the rotor may fall out of the stator or pump housing.**
8. Clean the machined surfaces in the pump housing of any foreign material.

8.2 Fitting the pump head

1. Carefully remove the new pump head assembly from its packaging. Separate the impeller/rotor assembly from the new pump head.
2. While holding the thrust bearing plate, carefully place the impeller/rotor assembly into the pump housing. The bearing plate should fit snugly into the lowest machined surface in the pump housing.
3. Ensure that the impeller/rotor assembly can rotate freely.
4. Place the O-ring over the rotor and locate it into the inner diameter of the pump housing.
5. Carefully place the pump head housing over the rotor and rotate it so the terminal box is in the position you wish; see section *5.2.1 Rotating the terminal box*.
6. Ensure that the pump head housing is properly seated on the pump housing. **Do not force the two together** - if there is binding, disassemble them and repeat steps 2 to 6. Cross-tighten the allen-head screws evenly.
   Torque to: 7 ft lb / 9.5 Nm.
7. Check to make sure the rotor turns freely. Do this by removing the vent plug in the middle of the pump nameplate. Insert a medium-size, flat-blade screwdriver into the slot at the exposed end of the shaft. Gently turn the shaft. If it does not turn easily, repeat steps 1 through 6 above. If the rotor spins freely, proceed to step 8. Do not put the vent plug back into the pump until the end of step 10.
8. The position of the nameplate can be changed by easing the outer edge of the plate at the cutout with a screwdriver. Turn the nameplate to the required position and push into place.
9. Follow electrical instructions in section *5.3 Electrical connection*.
10. Refill the system, open the isolation valves and vent the system. Also allow air to vent out of the pump, once water flows out the vent hole, replace the vent plug removed in step 7. See additional instructions in section *6.1 Vent the piping system*.

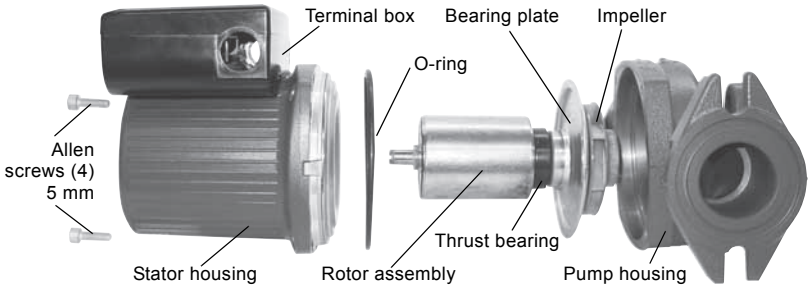

Fig. 17 Removing and fitting the pump head

8.3 Replacing the terminal box or capacitor

Warning

Before starting any work on this circulator, make sure electrical supply has been switched off and that it cannot be accidentally switched on.

Removal

1. Before replacing the terminal box and capacitor, **make sure the power is OFF**.
2. Remove the terminal box cover/lid by completely loosening the Phillips head screw in the center of the cover/lid.
3. Disconnect all wiring. Move the capacitor to allow access to the screws.
4. Remove the two T15 Torx head screws holding the terminal box in place.
5. Pull firmly and evenly on both sides of the terminal box to free it from the stator / pump head.

Installation

1. Carefully press the terminal box into the stator socket.
2. Replace the two T15 Torx head screws and torque to 1.5 ft.-lbs / 2 Nm.
3. Replace the wiring (refer to section *5.3 Electrical connection*).
4. Use care when installing the terminal box cover with speed switch. Next insert the Phillips head screw through the cover and tighten to a snug fit.
5. Restore power.

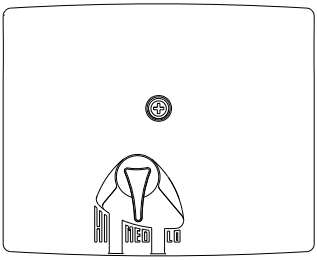

TM04 5641 2515

Fig. 18 Terminal box lid / cover

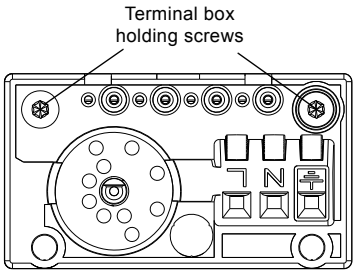

TM04 5642 3609

Fig. 19 Terminal box holding screws

9. Additional technical data

Supply voltage:	1 x 115 V ± 10 %, 60 Hz
	1 x 208-230 V ± 10 %, 60 Hz
Motor protection:	Thermally protected
Enclosure class:	CSA Type 2
Insulation class:	H
Max. discharge pressure:	145 psi (10 bar)
Max. sound pressure level:	30 dB(A)
Water hardness:	14 dH

Open systems (domestic, potable hot water)		
	Fluid	**Ambient**
Min.	36 °F (2 °C)	33 °F (1 °C)
Max.	< 149 °F (65 °C)	100 °F (38 °C)

Caution

In domestic hot-water systems, it is recommended to keep the liquid temperature below 149 °F (65 °C) to eliminate the risk of lime precipitation.

Closed systems (non-potable heating or cooling airless fluid)			
	Pump models	**Fluid**	**Ambient**
Min.	**All**	36 °F (2 °C)	33 °F (1 °C)
Max.	**UPS 26-150**	230 °F (110 °C)	100 °F (38 °C)
	UPS 43-100	230 °F (110 °C)	100 °F (38 °C)
	UPS 50-60	212 °F (100 °C)	100 °F (38 °C)

Water and glycol mix	
Max.	50 % glycol at 15 °F (-9.5 °C) liquid

(Hydraulic performance change can be expected.)

10. Disposal

This product or parts of it must be disposed of in an environmentally sound way:

1. Use the public or private waste collection service.
2. If this is not possible, contact the nearest Grundfos company or service workshop.

GRUNDFOS Kansas City
17100 West 118th Terrace
Olathe, Kansas 66061
Phone: (913) 227-3400
Fax: (913) 227-3500

www.grundfos.us

GRUNDFOS Canada
2941 Brighton Road
Oakville, Ontario L6H 6C9 Canada
Phone: +1-905 829 9533
Telefax: +1-905 829 9512

www.grundfos.ca

GRUNDFOS México
Boulevard TLC No. 15
Parque Industrial Stiva Aeropuerto
C.P. 66600 Apodaca, N.L. México
Phone: 011-52-81-8144 4000
Fax: 011-52-81-8144 4010

www.grundfos.mx

© Copyright Grundfos Holding A/S

The name Grundfos, the Grundfos logo, and **be think innovate** are registered trademarks owned by Grundfos Holding A/S or Grundfos A/S, Denmark. All rights reserved worldwide.

98419789 0718

ECM: 1239430