UP Series

Circulator pumps
60 Hz

be
think
innovate

GRUNDFOS

Table of contents

1. Cross-reference charts 3
Cross-reference for competitive 3-speed pumps 3
Reference for replacing TACO models 5
Reference for replacing Bell & Gossett models 16
Reference for replacing Laing models 19
Reference for replacing Armstrong models 21
Reference for replacing Wilo models 24
Discontinued products 27

2. Performance ranges 29
ALPHA2 29
ALPHA1 30
UPS, 3-speed 31
UPS, cross-reference 3-speed, stainless steel 32
UP 10-16 A/PM B5/BN5/BU 32
UP, closed systems 33
UP/UPS, open systems 33
UP, open systems, 1/2" 34
UP, open systems, 3/4" 34

3. Product range 35
Cast iron 35
Bronze 36
Stainless steel 37

4. Identification 38
Type key 38
Faceplate 39

5. Applications 40
Heating systems 40
Domestic hot-water systems 40
Cooling systems 40
Construction 40
Engineering materials 41
Installation 42
Pumped liquids 42
Ambient and liquid temperatures 43
Maximum system pressure 44
Minimum inlet pressure 44
Performance 44

6. Technical data 45
UP 10-16 Comfort PM, PM Auto 45
UP 10-16 Comfort PM, PM Auto, PM Temperature 46
UP 15-10 B5/B7 47
UP 15-10 BUC5/BUC7 48
UP 15-10 F/FR 49
UP Comfort System 50
UP 15-18 B5/B7 51
UP 15-18 BUC5/BUC7 52
UP 15-29 SU/SF 53
UP 15-35 SUC 54
UPS 15-35 SUC/SFC 55
UP 15-42 B5/B7 56
UP 15-42 BUC5/BUC7 57
UP 15 MixiMizer™ 58
UP 15-42 F/FR 59
UPS 15-42 F 60
UP 15 MixiMizer™ 61
UP variable speed 62
UP 15-55 SUC 63
UPS 15-55 SFC/SUC/TLC 64
ALPHA2 65
ALPHA2 66
ALPHA1 67
ALPHA1 68
UPS 15-58 FC/FRC 69
UP 15-100 F 70
UP 26-64 F 71
UP 26 variable speed 72
UP 26-96 F/SF 73
UP 26 variable speed 74
UP 26-99 F/SF 75
UPS 26-99 FC/SFC 76
UP 26-116 F/SF 77
UP 26-120 U 78
UPS 26-150 F/SF 79
UP 43-44 F/BF 80
UPS 43-44 FC/BFC 81
UP 43-70 F 82
UP 43-75 F/BF 83
UPS 43-100 F/SF 84
UP 43-110 F 85
UPS 50-44 F 86
UPS 50-60 F/SF 87
UP 50-75 F 88

7. Accessories 89
Aquastat 91
Packaged dielectric isolating valve sets 92
Packaged fitting sets 93
UP-ZV zone valves 94
Technical data 94
Replacement flange gaskets 95

8. Grundfos Product Center 96

1. Cross-reference charts

Cross-reference for competitive 3-speed pumps

Competitor cross-reference				
Model	**Speed**	**TACO***	**Bell & Gossett***	**Armstrong***
ALPHA2 15-55 FC/FRC ALPHA1 15-55 FC/FRC	High	005F, 006F7, 007F, 008F, 0010F, 00R-MSF1-IFC, 0015, VR1816, VT2218, 0015e	NRF-22, LR-20WR, Ecocirc 19-14 auto, vario	Astro 30, Astro 30-(3), Astro 50-3, Astro 230CI, Compass
	Med.	005F-(IFC), 007F-(IFC), 008F-(IFC), 0010F-IFC, 00R-IFC, 00R-MSF1-IFC, VT2218, VR1816, 0015e, 007e	NRF9F/LW, NRF-25, Ecocirc 19-14 auto, vario	Astro 25, Astro 30-3, Compass
	Low	005F-(IFC), 006F-(IFC), 00R-MSF1-IFC, VT2218, VR1816, 0015e	Ecocirc 19-14 auto, vario	Astro 20, Compass
UPS 15-58 FC/FRC	High	005F, 007F, 008F, 0010F, 00R-MSF1-IFC, 0015	NRF-22, LR-20WR	Astro 30, Astro 30-(3), Astro 50-3, Astro 230CI
	Med.	005F-(IFC), 007F-(IFC), 008F-(IFC), 0010F-IFC, 00R-IFC, 00R-MSF1-IFC	NRF9F/LW, NRF-25	Astro 25, Astro 30-3
	Low	005F-(IFC), 006F-(IFC), 00R-MSF1-IFC		Astro 20
UPS 26-99 FC/SFC	High	0013(B)-IFC	NRF-36 Sp-2, NRF-45 Sp-2, H-41(B)	E7(B), Astro 50(B)-(3)
	Med.	0011(B)-(IFC), 0014(B)-(IFC)	Series 100, PL-30, PR, NRF-36, Sp-1, NRF-45 Sp-1	Astro 50(B), H41
	Low	-	LR-15BWR	Astro 30(B)
UPS 26-150 F/SF	High	1400-45(B), 1400-50(B), 2400-45	PL-55(B)	E15(B)
	Med.	0011(B, SF), 0013(B, SF), 1400-20(B), 1400-30(B), 1400-40(B), 2400-30	PL-36(B)	E8(B), E9(B), E11(B), E13(B)
	Low	2400-20, 2400-40	NRF(NBF)-36 Sp-2 & 3	E7(B), E10(B)
UPS 43-44 FC/BFC	High	0012(B, SF)-(IFC), 113(B)	HV, H-32(B)	E16(B)
	Med.	0010(B, SF)-(IFC), 111(B)	NRF-33	H32
	Low	0010-MSF1-IFC, 110(B)	-	-
UPS 43-100 F/SF	High	-	H-51(B), H-52(B)	E17(B)
	Med.	1400-20(B), 1400-30(B), 1400-40(B), 1400-45(B), 2400-20, 2400-30	PL-45(B), PL-50(B), NRF(NBF)-45 Sp-2 & 3, NRF-36 Sp-2 & 3	E11(B), E15(B), E16(B)
	Low	2400-10	-	10(B), E13(B)
UPS 50-60 F/SF	High	1400-65 (B), 131(B), 2400-65	PL-130(B), S-35(B)	E19(B), E28(B), E29(B), E30(B)
	Med.	1400-60(B), 121(B), 122(B), 131(B)	PL-50(B), PL-75(B)	E28(B)
	Low	120(B), 2400-60	-	E16(B)
UPS 15-35 SFC	High	005BF2-(IFC), 007(B, SF)-(IFC)	NBF(SSF)-12F/LW	SM-909-BF14, Astro 25B, Astro 30(B) Sp-2
	Med.	-	-	Astro 20(B), Astro 30(B)-3 Sp-1 & 2
	Low	-	-	-
UPS 15-35 SUC	High	-	NBF(SSF)-12U/LW	Astro 25BU, Astro 220, 225SSU
	Med.	006BC4-1, 006B7-IFC	NBF-9U/LW	Astro 25BU, Astro 20, 25(BU)
	Low	003-B4-2-IFC	-	-

UPS 15-35 SUC/TLC	High	-	-	Astro 20, 25BU(LC, T), Astro 25U-T
	Med.	-	-	Astro 25U-T
	Low	-	-	-
UPS 15-55 SFC	High	-	-	Astro 30B-(3), Astro 230SS, Astro 30(B), SM-909-BF14, SM-909-BF18
	Med.	005-(B, SF), 006-BF, 007-(B, SF)-(IFC), 008-(B, SF)-(IFC), 00R-SF-IFC	LR-15B, NBF(SSF)-22, NBF-25	Astro 30(B) Sp-2, Astro 30(B)-3 Sp-1
	Low	-	-	Astro 30(B) Sp-1, Astro 50(B) Sp-1

* Grundfos provides no guarantee as to the accuracy of competitor information listed herein.

Reference for replacing TACO models

Open systems: Stainless steel and lead-free bronze pump housings

Competitor cross-reference for TACO
Open systems: Stainless steel and lead-free bronze pump housings

TACO model	Port-to-port length [in]	Flange size/ connection type	Grundfos model	Port-to-port length [in]	Flange size/ connection type	Grundfos product number					
						1 x 115 V	1 x 208 V	1 x 230 V	3 x 208 V	3 x 230 V	3 x 460 V
00R-SF6-IFC	6 3/8	2-bolt flange	UPS 15-55 SFC	6 1/2	2-bolt flange*	59896773	-	-	-	-	-
			ALPHA2 15-55 SFC, ALPHA1 15-55 SFC	6 1/2	2-bolt flange*	99163937, 99163972, 99287250, 99287262	-	-	-	-	-
00R-SF6-1IFC	6 3/8	2-bolt flange-R	UPS 15-55 SFC	6 1/2	2-bolt flange	59896773	-	-	-	-	-
			ALPHA2 15-55 SFC, ALPHA1 15-55 SFC	6 1/2	2-bolt flange	99163937, 99163972, 99287250, 99287262	-	-	-	-	-
003-B4	4 13/32	3/4" sweat	UP 15-10 B7	5	3/4" sweat	59896226	-	-	-	-	-
003-B4-PNP	3 5/16	3/4" sweat	UP 15-10 B7/TLC	5	3/4" sweat	99452455	-	-	-	-	-
003-B4-1PNP	3 5/16	3/4" sweat	UP 15-10 B7/LC	5	3/4" sweat	59896209	-	-	-	-	-
003-B4-2IFC	5 15/16	Union	-	-	-	-	-	-	-	-	-
003-B4-2PNP	3 5/16	3/4" sweat	UP 15-10 B7/TLC	5	3/4" sweat	99452455	-	-	-	-	-
003-B4-3PNP	5 15/16	Union	-	-	-	-	-	-	-	-	-
003-B4-4PNP	5 15/16	Union	-	-	-	-	-	-	-	-	-
003-BC	4 13/32	1/2" sweat	UP 15-10 B5	5	1/2" sweat	59896213	-	-	-	-	-
003-BC-1	6	Union	-	-	-	-	-	-	-	-	-
003-BC4	4 1/4	1/2" sweat	UP 15-10 B5	5	1/2" sweat	59896213	-	-	-	-	-
003-BC4-1	5 15/16	Union	-	-	-	-	-	-	-	-	-
003-BC4-1IFC	4 3/8	1/2" sweat	UP 15-10 BUC5	5	1/2" sweat	59896225	-	-	-	-	-
003-BC4-IFC	4 3/8	3/4" sweat	UP 15-10 BUC7	5	3/4" sweat	59896241	-	-	-	-	-
003-BC4-PNP	3 5/16	1/2" sweat	UP 15-10 B5/TLC	5	1/2" sweat	99452454	-	-	-	-	-
003-BC4-1PNP	5 15/16	Union	-	-	-	-	-	-	-	-	-
003-BC4-2PNP	3 5/16	3/4" sweat	UP 15-10 BUC7/TLC	5	3/4" sweat	99452458	-	-	-	-	-
003-BC4-3PNP	3 5/16	1/2" sweat	UP 15-10 BUC5/TLC	5	1/2" sweat	99452457	-	-	-	-	-
003-BC4-4PNP	3 5/16	1/2" sweat	UP 15-10 B5/LC	5	1/2" sweat	59896214	-	-	-	-	-
003-BC4-5PNP	5 15/16	Union	-	-	-	-	-	-	-	-	-
003-BC4-6PNP	3 5/16	3/4" sweat	UP 15-10 BUC7/LC	5	3/4" sweat	59896239	-	-	-	-	-
003-BC4-7PNP	3 5/16	1/2" sweat	UP 15-10 BUC5/LC	5	1/2" sweat	59896237	-	-	-	-	-
003-BC4-8PNP	3 5/16	1/2" sweat	UP 15-10 B5/TLC	5	1/2" sweat	99452454	-	-	-	-	-
003-BC4-9PNP	5 15/16	Union	-	-	-	-	-	-	-	-	-
003-BC4-10PNP	3 5/16	3/4" sweat	UP 15-10 BUC7/TLC	5	3/4" sweat	99452458	-	-	-	-	-
003-BC4-11PNP	3 5/16	1/2" sweat	UP 15-10 BUC5/TLC	5	1/2" sweat	99452457	-	-	-	-	-
003-BT4-PNP	4	3/4" FNPT	-	-	-	-	-	-	-	-	-
003-BT4-1PNP	4	3/4" FNPT	-	-	-	-	-	-	-	-	-
003-BT4-2PNP	4	3/4" FNPT	-	-	-	-	-	-	-	-	-
003-SC4-1	5 15/16	Union	UP 15-35 SUC	5 7/8	GU 125	59896778	-	-	-	-	-
003-SC4-IFC	5 15/16	Union	UP 15-35 SUC	5 7/8	GU 125	59896778	-	-	-	-	-
003-SC4-1PNP	3 5/16	Union	UPS 15-35 SUC/TLC	5 7/8	GU 125	99452478	-	-	-	-	-
003-SC4-2PNP	3 5/16	Union	UPS 15-35 SUC/TLC	5 7/8	GU 125	99452478	-	-	-	-	-
003-SC4-3PNP	3 5/16	Union	UPS 15-35 SUC/TLC	5 7/8	GU 125	99452478	-	-	-	-	-
003-SC4-4PNP	3 5/16	Union	UPS 15-35 SUC/TLC	5 7/8	GU 125	99452478	-	-	-	-	-
003-ST4	4	3/4" NPT	-	-	-		-	-	-	-	-
003-ST4-PNP	3 5/16	3/4" FNPT	-	-	-		-	-	-	-	-
003-ST4-1PNP	3 5/16	3/4" FNPT	-	-	-		-	-	-	-	-
003-ST4-2PNP	3 5/16	3/4" FNPT	-	-	-	-	-	-	-	-	-
003-VRFBC4	4 3/8	1/2" sweat	UP 15-42 BUC5/MR	6 1/2	1/2" sweat	59896805	-	-	-	-	-
003-VRBC4-1IFC	4 3/8	1/2" sweat	UP 15-42 BUC5/MR	6 1/2	1/2" sweat	59896805	-	-	-	-	-
003-VRFB4	4 3/8	3/4" sweat	UP 15-42 BUC7/MR	7 1/4	3/4" sweat	59896806	-	-	-	-	-

* May not match specific competitive flange orientation.

Grundfos provides no guarantee as to the accuracy of competitor information listed herein.

Competitor cross-reference for TACO
Open systems: Stainless steel and lead-free bronze pump housings

TACO model	Port-to-port length [in]	Flange size/ connection type	Grundfos model	Port-to-port length [in]	Flange size/ connection type	Grundfos product number					
						1 x 115 V	1 x 208 V	1 x 230 V	3 x 208 V	3 x 230 V	3 x 460 V
003-VRBC4-IFC	4 3/8	3/4" sweat	UP 15-42 BUC7/MR	7 1/4	3/4" sweat	59896806	-	-	-	-	-
003-VVBC4	4 3/8	1/2" sweat	-	-	-	-	-	-	-	-	-
003-VVBC4-1IFC	4 3/8	1/2" sweat	-	-	-	-	-	-	-	-	-
003-VVB4	4 3/8	3/4" sweat	-	-	-	-	-	-	-	-	-
003-VVBC4-IFC	4 3/8	3/4" sweat	-	-	-	-	-	-	-	-	-
005-BF2	6 3/8	2-bolt flange-R	UPS 15-29 SF	6 1/2	2-bolt flange	59896771	-	-	-	-	-
005-BF2-IFC	6 3/8	2-bolt flange-R	-	-	-	-	-	-	-	-	-
005-SF2	6 3/8	2-bolt flange	UPS 15-29 SF	6 1/2	2-bolt flange*	59896771	-	-	-	-	-
005-SF2-IFC	6 3/8	2-bolt flange-R	-	-	-	-	-	-	-	-	-
005-SF2-PNP	6 3/8	2-bolt flange-R	UPS 15-29 SUC/TLC	5 7/8	GU 125*	99452462	-	-	-	-	-
005-SF2-1PNP	6 3/8	2-bolt flange-R	UPS 15-29 SUC/TLC	5 7/8	GU 125*	99452462	-	-	-	-	-
006-B	4 1/4	3/4" sweat	UP 15-18 B7	6 3/8	3/4" sweat	59896121	-	59896119	-	-	-
006-B4	4 13/32	3/4" sweat	UP 15-18 B7	6 3/8	3/4" sweat	59896121	-	59896119	-	-	-
006-B4-PNP	4 1/4	3/4" sweat	UP 15-18 B7/TLC	6 3/8	3/4" sweat	99452461	-	-	-	-	-
006-B4-1PNP	4 1/4	3/4" sweat	UP 15-18 B7/LC	6 3/8	3/4" sweat	59896229	-	-	-	-	-
006-B4-2PNP	4 1/4	3/4" sweat	UP 15-18 B7/TLC	6 3/8	3/4" sweat	99452461	-	-	-	-	-
006-B7-IFC	5 15/16	3/4" sweat	UP 15-18 BUC7	6 3/8	3/4" sweat	59896124	-	-	-	-	-
006-BC4	4 1/4	1/2" sweat	UP 15-18 B5	5	1/2" sweat	59896114	-	59896118	-	-	-
006-BC4-PNP	4 13/32	1/2" sweat	UP15-18 B5/TLC	5	1/2" sweat	99452460	-	-	-	-	-
006-BC4-1PNP	5 15/16	Union	-	-	-	-	-	-	-	-	-
006-BC4-2PNP	4 13/32	1/2" sweat	UP 15-18 B5/LC	5	1/2" sweat	59896211	-	-	-	-	-
006-BC4-3PNP	5 15/16	Union	-	-	-	-	-	-	-	-	-
006-BC4-4PNP	4 13/32	1/2" sweat	UP15-18 B5/TLC	5	1/2" sweat	99452460	-	-	-	-	-
006-BC4-5PNP	5 15/16	Union	-	-	-	-	-	-	-	-	-
006-BC7-PNP	4 3/8	3/4" sweat	-	-	-	-	-	-	-	-	-
006-BC7-1PNP	4 13/32	1/2" sweat	UP 15-18 BUC5	6 1/2	1/2" sweat	59896123	-	-	-	-	-
006-BC7-2PNP	4 3/8	3/4" sweat	-	-	-	-	-	-	-	-	-
006-BC7-3PNP	4 13/32	3/4" sweat	-	-	-	-	-	-	-	-	-
006-BC7-4PNP	4 3/8	3/4" sweat	-	-	-	-	-	-	-	-	-
006-BC7-5PNP	4 13/32	1/2" sweat	-	-	-	-	-	-	-	-	-
006-BC7-IFC	4 3/8	3/4" sweat	UP 15-18 BUC7	7 1/4	3/4" sweat	59896124	-	-	-	-	-
006-BC7-1IFC	4 3/8	1/2" sweat	UP 15-18 BUC5	7 1/4	1/2" sweat	59896123	-	-	-	-	-
006-BT4	4	3/4" FNPT	-	-	-	-	-	-	-	-	-
006-BT4-PNP	4	3/4" FNPT	-	-	-	-	-	-	-	-	-
006-BT4-2PNP	4	3/4" FNPT	-	-	-	-	-	-	-	-	-
006-BT4-3PNP	4	3/4" FNPT	-	-	-	-	-	-	-	-	-
006-SC4-1	5 15/16	Union	UPS 15-35 SUC	5 7/8	GU 125	59896778	-	-	-	-	-
006-SC4-1PNP	3 5/16	Union	UPS 15-35 SUC/TLC	5 7/8	GU 125	99452478	-	-	-	-	-
006-SC4-2PNP	3 5/16	Union	UPS 15-35 SUC/TLC	5 7/8	GU 125	99452478	-	-	-	-	-
006-SC4-3PNP	3 5/16	Union	UPS 15-35 SUC/TLC	5 7/8	GU 125	99452478	-	-	-	-	-
006-SC7-IFC	5 15/16	Union	UPS 15-35 SUC	5 7/8	GU 125	59896778	-	-	-	-	-
006-SC7-PNP	5 15/16	Union	UPS 15-35 SUC/TLC	5 7/8	GU 125	99452478	-	-	-	-	-
006-ST4	4	3/4" FNPT	-	-	-	-	-	-	-	-	-
006-ST4-PNP	3 5/16	3/4" FNPT	-	-	-	-	-	-	-	-	-
006-ST4-1PNP	3 5/16	3/4" FNPT	-	-	-	-	-	-	-	-	-
006-ST4-2PNP	3 5/16	3/4" FNPT	-	-	-	-	-	-	-	-	-
006-VRBC4	4 3/8	1/2" sweat	UP 15-42 BUC5/MR	6 1/2	1/2" sweat	59896805	-	-	-	-	-
006-VRBC7-1IFC	4 3/8	1/2" sweat	UP 15-42 BUC5/MR	6 1/2	1/2" sweat	59896805	-	-	-	-	-
006-VRB4	4 3/8	3/4" sweat	UP 15-42 BUC7/MR	7 1/4	3/4" sweat	59896806	-	-	-	-	-

* May not match specific competitive flange orientation.

Grundfos provides no guarantee as to the accuracy of competitor information listed herein.

Competitor cross-reference for TACO
Open systems: Stainless steel and lead-free bronze pump housings

TACO model	Port-to-port length [in]	Flange size/ connection type	Grundfos model	Port-to-port length [in]	Flange size/ connection type	Grundfos product number					
						1 x 115 V	1 x 208 V	1 x 230 V	3 x 208 V	3 x 230 V	3 x 460 V
006-VRBC7-IFC	4 3/8	3/4" sweat	UP 15-42 BUC7/MR	7 1/4	3/4" sweat	59896806	-	-	-	-	-
006-VVBC4	4 3/8	1/2" sweat	-	-	-	-	-	-	-	-	-
006-VVBC7-1IFC	4 3/8	1/2" sweat	-	-	-	-	-	-	-	-	-
006-VVB4	4 3/8	3/4" sweat	-	-	-	-	-	-	-	-	-
006-VVBC7-IFC	4 3/8	3/4" sweat	-	-	-	-	-	-	-	-	-
007-BF	6 3/8	2-bolt flange	UPS 15-55 SFC	6 1/2	2-bolt flange*	59896773	-	-	-	-	-
			ALPHA2 15-55 SFC, ALPHA1 15-55 SFC	6 1/2	2-bolt flange*	99163937, 99163972, 99287250, 99287262	-	-	-	-	-
007-BF5	6 3/8	2-bolt flange	UPS 15-55 SFC	6 1/2	2-bolt flange*	59896773	-	-	-	-	-
			ALPHA2 15-55 SFC, ALPHA1 15-55 SFC	6 1/2	2-bolt flange*	99163937, 99163972, 99287250, 99287262	-	-	-	-	-
007-BF-IFC	6 3/8	2-bolt flange	UPS 15-55 SFC	6 1/2	2-bolt flange*	59896773	-	-	-	-	-
			ALPHA2 15-55 SFC, ALPHA1 15-55 SFC	6 1/2	2-bolt flange*	99163937, 99163972, 99287250, 99287262	-	-	-	-	-
007-BF5-IFC	6 3/8	2-bolt flange	UPS 15-55 SFC	6 1/2	2-bolt flange*	59896773	-	-	-	-	-
			ALPHA2 15-55 SFC, ALPHA1 15-55 SFC	6 1/2	2-bolt flange*	99163937, 99163972, 99287250, 99287262	-	-	-	-	-
007-SF5	6 3/8	2-bolt flange	UPS 15-55 SFC	6 1/2	2-bolt flange*	59896773	-	-	-	-	-
			ALPHA2 15-55 SFC, ALPHA1 15-55 SFC	6 1/2	2-bolt flange*	99163937, 99163972, 99287250, 99287262	-	-	-	-	-
007-SF5-IFC	6 3/8	2-bolt flange	UPS 15-55 SFC	6 1/2	2-bolt flange*	59896773	-	-	-	-	-
			ALPHA2 15-55 SFC, ALPHA1 15-55 SFC	6 1/2	2-bolt flange*	99163937, 99163972, 99287250, 99287262	-	-	-	-	-
007-MSSF1-IFC			UPS 15-35 SFC	6 1/2	2-bolt flange	59896772	-	-	-	-	-
008-BF6	6 3/8	2-bolt flange-R	UPS 15-55 SFC	6 1/2	2-bolt flange	59896773	-	-	-	-	-
			ALPHA2 15-55 SFC, ALPHA1 15-55 SFC	6 1/2	2-bolt flange*	99163937, 99163972, 99287250, 99287262	-	-	-	-	-
008-BF6-IFC	6 3/8	2-bolt flange	UPS 15-55 SFC	6 1/2	2-bolt flange*	59896773	-	-	-	-	-
			ALPHA2 15-55 SFC, ALPHA1 15-55 SFC	6 1/2	2-bolt flange*	99163937, 99163972, 99287250, 99287262	-	-	-	-	-
008-BC	6 3/8	3/4" sweat	UPS 15-42 BUC7	7 1/4	3/4" sweat	59896151	-	-	-	-	-
008-BC6	5 5/8	3/4" sweat	UPS 15-42 BUC7	7 1/4	3/4" sweat	59896151	-	-	-	-	-
008-BC6-IFC	6 1/2	3/4" sweat	UPS 15-42 BUC7	7 1/4	3/4" sweat	59896151	-	-	-	-	-
008-SF6	6 3/8	2-bolt flange	UPS15-55 SFC	6 1/2	2-bolt flange*	59896773	-	-	-	-	-
			ALPHA2 15-55 SFC, ALPHA1 15-55 SFC	6 1/2	2-bolt flange*	99163937, 99163972, 99287250, 99287262	-	-	-	-	-
008-SF6-IFC	5 15/16	2-bolt flange	UPS15-55 SFC	6 1/2	2-bolt flange*	59896773	-	-	-	-	-
			ALPHA2 15-55 SFC, ALPHA1 15-55 SFC	6 1/2	2-bolt flange*	99163937, 99163972, 99287250, 99287262	-	-	-	-	-

* May not match specific competitive flange orientation.

Grundfos provides no guarantee as to the accuracy of competitor information listed herein.

Competitor cross-reference for TACO
Open systems: Stainless steel and lead-free bronze pump housings

TACO model	Port-to-port length [in]	Flange size/ connection type	Grundfos model	Port-to-port length [in]	Flange size/ connection type	Grundfos product number					
						1 x 115 V	1 x 208 V	1 x 230 V	3 x 208 V	3 x 230 V	3 x 460 V
008-SF6-2	5 15/16	2-bolt flange-R	UPS15-55 SFC	6 1/2	2-bolt flange	59896773	-	-	-	-	-
			ALPHA2 15-55 SFC, ALPHA1 15-55 SFC	6 1/2	2-bolt flange*	99163937, 99163972, 99287250, 99287262	-	-	-	-	-
008-SF6-1IFC	5 15/16	2-bolt flange-R	UPS15-55 SFC	6 1/2	2-bolt flange	59896773	-	-	-	-	-
			ALPHA2 15-55 SFC, ALPHA1 15-55 SFC	6 1/2	2-bolt flange*	99163937, 99163972, 99287250, 99287262	-	-	-	-	-
008-VRBC6	6 3/8	3/4" sweat	UP 15-42 BUC7/MR	7 1/4	3/4" sweat	59896806	-	-	-	-	-
008-VRBC6-IFC	6 3/8	3/4" sweat	UP 15-42 BUC7/MR	7 1/4	3/4" sweat	59896806	-	-	-	-	-
008-VVBC6	6 3/8	3/4" sweat	-	-	-	-	-	-	-	-	-
008-VVBC6-IFC	6 3/8	3/4" sweat	-	-	-	-	-	-	-	-	-
009-BF	6 3/8	Flange	-	-	-	-	-	-	-	-	-
			Magna 32-60 FN	6 1/2	2-bolt flange	-	98052802	98052802	98052802	98052802	-
009-BF-IFC	-	-	-	-	-	-	-	-	-	-	-
	-	-	Magna 32-60 FN	6 1/2	2-bolt flange	-	98052802	98052802	98052802	98052802	-
009-BF5	-	-	-	-	-	-	-	-	-	-	-
	-	-	Magna 32-60 FN	6 1/2	2-bolt flange	-	98052802	98052802	98052802	98052802	-
009-SF5	6 3/8	2-bolt flange-R	-	-	-	-	-	-	-	-	-
			Magna 32-60 FN	6 1/2	2-bolt flange	-	98052802	98052802	98052802	98052802	-
009-SF5-IFC	6 3/8	2-bolt flange-R	-	-	-	-	-	-	-	-	-
			Magna 32-60 FN	6 1/2	2-bolt flange	-	98052802	98052802	98052802	98052802	-
0010-BF2	6 3/8	2-bolt flange	UPS 43-44 BFC	8 1/2	2-bolt flange*	52722520	-	52722521	-	-	-
			Magna 32-60 FN	6 1/2	2-bolt flange	-	98052802	98052802	98052802	98052802	-
0010-BF-IFC	-	-	UPS 43-44 BFC	8 1/2	2-bolt flange*	52722520	-	52722521	-	-	-
	-	-	Magna 32-60 FN	6 1/2	2-bolt flange	-	98052802	98052802	98052802	98052802	-
0010-BF3	6 3/8	2-bolt flange-R	UPS 43-44 BFC	8 1/2	2-bolt flange	52722520	-	52722521	-	-	-
			Magna 32-60 FN	6 1/2	2-bolt flange	-	98052802	98052802	98052802	98052802	-
0010-SF3	6 3/8	2-bolt flange	UPS 43-44 BFC	8 1/2	2-bolt flange*	52722520	-	52722521	-	-	-
			Magna 32-60 FN	6 1/2	2-bolt flange	-	98052802	98052802	98052802	98052802	-
0010-SF3-IFC	6 3/8	2-bolt flange	UPS 43-44 BFC	8 1/2	2-bolt flange*	52722520	-	52722521	-	-	-
			Magna 32-60 FN	6 1/2	2-bolt flange	-	98052802	98052802	98052802	98052802	-
0011-BF4	6 1/2	2-bolt flange	UPS 26-99 SFC	6 1/2	2-bolt flange*	98961763	-	98961765	-	-	-
			Magna 32-60 FN	6 1/2	2-bolt flange	-	98052802	98052802	98052802	98052802	-
0011-BF-IFC	-	-	UPS 26-99 SFC	6 1/2	2-bolt flange*	98961763	-	98961765	-	-	-
	-	-	Magna 32-60 FN	6 1/2	2-bolt flange	-	98052802	98052802	98052802	98052802	-
0011-SF4	6 3/8	2-bolt flange-R	UPS 26-99 SFC	6 1/2	2-bolt flange	98961763	-	98961765	-	-	-
			Magna 32-60 FN	6 1/2	2-bolt flange	-	98052802	98052802	98052802	98052802	-
0011-SF4-IFC	6 1/2	2-bolt flange-R	UPS 26-99 SFC	6 1/2	2-bolt flange	98961763	-	98961765	-	-	-
			Magna 32-60 FN	6 1/2	2-bolt flange	-	98052802	98052802	98052802	98052802	-
0012-BF	8 1/2	2-bolt flange-R	UPS 43-44 BFC	8 1/2	2-bolt flange	52722520	-	52722521	-	-	-
			Magna 40-120 FN	8 1/2	3/4" to 1 1/2"	-	-	96734633	-	96734633	-
0012-BF4-IFC	8 1/2	2-bolt flange-R	UPS 43-44 BFC	8 1/2	2-bolt flange	52722520	-	52722521	-	-	-
			Magna 40-120 FN	8 1/2	3/4" to 1 1/2"	-	-	96734633	-	96734633	-
0012-BF4	8 1/2	2-bolt flange	UPS 43-44 BFC	8 1/2	2-bolt flange*	52722520	-	52722521	-	-	-
			Magna 40-120 FN	8 1/2	3/4" to 1 1/2"	-	-	96734633	-	96734633	-
0012-BF4-1	8 1/2	2" flange	UPS 43-44 BFC	8 1/2	2-bolt flange*	52722520	-	52722521	-	-	-
			Magna 40-120 FN	8 1/2	3/4" to 1 1/2"	-	-	96734633	-	96734633	-
0012-SF4	8 1/2	1 1/2" flange	UPS 43-44 BFC	8 1/2	2-bolt flange*	52722520	-	52722521	-	-	-
			Magna 40-120 FN	8 1/2	3/4" to 1 1/2"	-	-	96734633	-	96734633	-
0012-SF4-IFC	8 1/2	1 1/2" flange	UPS 43-44 BFC	8 1/2	2-bolt flange*	52722520	-	52722521	-	-	-
			Magna 40-120 FN	8 1/2	3/4" to 1 1/2"	-	-	96734633	-	96734633	-
0012-VRBF4-1	6 1/2	2" flange	-	-	-	-	-	-	-	-	-
			Magna 40-120 FN	8 1/2	3/4" to 1 1/2"	-	-	96734633	-	96734633	-

* May not match specific competitive flange orientation.

Grundfos provides no guarantee as to the accuracy of competitor information listed herein.

Competitor cross-reference for TACO
Open systems: Stainless steel and lead-free bronze pump housings

TACO model	Port-to-port length [in]	Flange size/ connection type	Grundfos model	Port-to-port length [in]	Flange size/ connection type	Grundfos product number					
						1 x 115 V	1 x 208 V	1 x 230 V	3 x 208 V	3 x 230 V	3 x 460 V
0012-VVBF4-1	6 1/2	2" flange	-	-	-	-	-	-	-	-	-
			Magna 40-120 FN	8 1/2	3/4" to 1 1/2"	-	-	96734633	-	96734633	-
0013-BF3	6 1/2	2-bolt flange	UPS 26-150 SF	6 1/2	2-bolt flange*	95906632	-	95906633	-	95906633	-
			Magna 32-100 FN	6 1/2	2-bolt flange	-	98052760	98052760	98052760	98052760	-
0013-BF-IFC	6 1/2	2-bolt flange	UPS 26-150 SF	6 1/2	2-bolt flange*	95906632	-	95906633	-	95906633	-
			Magna 32-100 FN	6 1/2	2-bolt flange	-	98052760	98052760	98052760	98052760	-
0013-SF3	6 1/2	2-bolt flange-R	UPS 26-150 SF	6 1/2	2-bolt flange	95906632	-	95906633	-	95906633	-
			Magna 32-100 FN	6 1/2	2-bolt flange	-	98052760	98052760	98052760	98052760	-
0013-SF3-IFC	6 1/2	2-bolt flange-R	UPS 26-150 SF	6 1/2	2-bolt flange	95906632	-	95906633	-	95906633	-
			Magna 32-100 FN	6 1/2	2-bolt flange	-	98052760	98052760	98052760	98052760	-
0014-BF	6 1/2	2-bolt flange-R	UPS 26-99 SFC	6 1/2	2-bolt flange	98961763	-	98961765	-	-	-
			Magna 32-100 FN	6 1/2	2-bolt flange	-	98052760	98052760	98052760	98052760	-
0014-BF-1	6 1/2	2-bolt flange	UPS 26-99 SFC	6 1/2	2-bolt flange*	98961763	-	98961765	-	-	-
			Magna 32-100 FN	6 1/2	2-bolt flange	-	98052760	98052760	98052760	98052760	-
0014-BF1-1IFC	6 1/2	2-bolt flange	UPS 26-99 SFC	6 1/2	2-bolt flange*	98961763	-	98961765	-	-	-
			Magna 32-100 FN	6 1/2	2-bolt flange	-	98052760	98052760	98052760	98052760	-
0014-SF1	6 1/2	2-bolt flange-R	UPS 26-99 SFC	6 1/2	2-bolt flange	98961763	-	98961765	-	-	-
			Magna 32-100 FN	6 1/2	2-bolt flange	-	98052760	98052760	98052760	98052760	-
0014-SF1-1IFC	6 1/2	2-bolt flange-R	UPS 26-99 SFC	6 1/2	2-bolt flange	98691763	-	98961765	-	-	-
			Magna 32-100 FN	6 1/2	2-bolt flange	-	98052760	98052760	98052760	98052760	-
0015-MSSF2-IFC	6 1/2	2-bolt flange	UPS 15-55 SFC	6 1/2	2-bolt flange*	59896773	-	-	-	-	-
0015-MSSF2-1IFC	6 1/2	2-bolt flange-R	UPS 15-55 SFC	6 1/2	2-bolt flange	59896773	-	-	-	-	-
1400-10B	6 3/8	2-bolt flange-R	UPS 26-99 SFC	6 1/2	2-bolt flange	98691763	-	98961765	-	-	-
			Magna 32-60 FN	6 1/2	2-bolt flange	-	98052802	98052802	98052802	98052802	-
1400-20B	6 3/8	2-bolt flange-R	UPS 26-150 SF	6 1/2	2-bolt flange	95906632	95906633	95906633	-	-	-
			Magna 32-100 FN	6 1/2	2-bolt flange	-	98052760	98052760	98052760	98052760	-
1400-30B	8 1/2	2-bolt flange-R	UPS 26-150 SF	6 1/2	2-bolt flange	95906632	95906633	95906633	-	-	-
			Magna 32-100 FN	6 1/2	2-bolt flange	-	98052760	98052760	98052760	98052760	-
1400-40B	8 1/2	2-bolt flange-R	UPS 43-100 SF	8 1/2	2-bolt flange	95906638	95906639	95906639	-	-	-
			Magna 32-100 FN	6 1/2	2-bolt flange	-	98052760	98052760	98052760	98052760	-
1400-45B	6 3/8	2-bolt flange-R	UPS 26-150 SF	6 1/2	2-bolt flange	95906632	95906633	95906633	-	-	-
			Magna 40-120 FN	8 1/2	3/4" to 1 1/2"	-	-	96734633	-	96734633	-
1400-50B	6 3/8	2" bolt flange	UPS 40-160/2 B	11 1/2	2" 4-bolt flange*	96402787	96402788	96402787	96402788	-	-
			Magna 40-120 FN	8 1/2	3/4" to 1 1/2"	-	-	96734633	-	96734633	-
1400-50B/2	6 3/8	2" bolt flange	UPS 40-160/2 B	11 1/2	2" 4-bolt flange*	96402787	-	96402788	96402789	96402789	96402790
1400-60B	8 1/2	2-bolt flange-R	UPS 43-100 SF	8 1/2	2-bolt flange	95906638	95906639	95906639	-	-	-
1400-65B	8 1/2	2-bolt flange-R	UPS 50-60 SF	8 1/2	4-bolt flange	97523136	97523137	97523137	-	-	-
1400-70B	8 1/2	4-bolt flange	UPS 50-80/4 B	11 1/2	2" 4-bolt flange*	96404963	-	96404964	96404965	96404965	96404966
1400-70B/3	8 1/2	4-bolt flange	UPS 50-80/4 B	11 1/2	2" 4-bolt flange*	96404963	-	96404964	96404965	96404965	96404966
2400-10S	6 3/8	2-bolt flange-R	UPS 26-99 SFC	6 1/2	2-bolt flange	98961763	-	98961765	-	-	-
			Magna 32-60 FN	6 1/2	2-bolt flange	-	98052802	98052802	98052802	98052802	-
2400-20S	6 3/8	2-bolt flange-R	UPS 26-150 SF	6 1/2	2-bolt flange	95906632	95906633	95906633	-	-	-
			Magna 32-100 FN	6 1/2	2-bolt flange	-	98052760	98052760	98052760	98052760	-
2400-30S	8 1/2	2-bolt flange-R	UPS 26-150 SF	6 1/2	2-bolt flange	95906632	95906633	95906633	-	-	-
			Magna 32-100 FN	6 1/2	2-bolt flange	-	98052760	98052760	98052760	98052760	-
2400-40S	8 1/2	2-bolt flange-R	UPS 43-100 SF	8 1/2	2-bolt flange	95906638	95906639	95906639	-	-	-
			Magna 32-100 FN	6 1/2	2-bolt flange	-	98052760	98052760	98052760	98052760	-
2400-45S	6 3/8	2-bolt flange-R	UPS 26-150 SF	6 1/2	2-bolt flange	95906632	95906633	95906633	-	-	-
			Magna 40-120 FN	8 1/2	3/4" to 1 1/2"	-	-	96734633	-	96734633	-

* May not match specific competitive flange orientation.

Grundfos provides no guarantee as to the accuracy of competitor information listed herein.

Competitor cross-reference for TACO
Open systems: Stainless steel and lead-free bronze pump housings

TACO model	Port-to-port length [in]	Flange size/ connection type	Grundfos model	Port-to-port length [in]	Flange size/ connection type	Grundfos product number					
						1 x 115 V	1 x 208 V	1 x 230 V	3 x 208 V	3 x 230 V	3 x 460 V
2400-50S	6 3/8	2-bolt flange-R	UPS 40-160/2 B	11 1/2	2" 4-bolt flange*	96402787	-	96402788	96402789	96402789	96402790
			Magna 40-120 FN	8 1/2	3/4" to 1 1/2"	-	-	96734633	-	96734633	-
2400-50S/2	6 3/8	2" 2-bolt flange	UPS 40-160/2 B	11 1/2	2" 4-bolt flange*	96402787		96402788	96402789	96402789	96402790
2400-60S	8 1/2	2" 4-bolt flange	UPS 43-100 SF	8 1/2	2-bolt flange	95906638	95906639	95906639	-	-	-
2400-65S	8 1/2	2" 4-bolt flange	UPS 50-60 SF	8 1/2	4-bolt flange	97523136	97523137	97523137	-	-	-
2400-70S	8 1/2	2" 4-bolt flange	UPS 50-80/4 B	11 1/2	2" 4-bolt flange*	96404963	-	96404964	96404965	96404965	96404966
2400-70S/3	8 1/2	3" 4-bolt flange	UPS 50-80/4 B	11 1/2	2" 4-bolt flange*	96404963	-	96404964	96404965	96404965	96404966

* May not match specific competitive flange orientation.

Grundfos provides no guarantee as to the accuracy of competitor information listed herein.

Closed systems: Cast iron pump housings

Competitor cross-reference for TACO
Closed systems: Cast iron pump housings

TACO model	Port-to-port length [in]	Flange size/ connection type	Grundfos model	Port-to-port length [in]	Flange size/ connection type	Grundfos product number					
						1 x 115 V	1 x 208 V	1 x 230 V	3 x 208 V	3 x 230 V	3 x 460 V
00R-F6-1IFC	6 3/8	2-bolt flange-R	UPS 15-58 FC	6 1/2	2-bolt flange	59896341	-	-	-	-	-
			ALPHA2 15-55 FC, ALPHA1 15-55 FC	6 1/2	2-bolt flange	99163903, 99163906, 99285998, 99287256	-	-	-	-	-
00R-MSF2-IFC	6 3/8	2-bolt flange-R	-	-	-	-	-	-	-	-	-
00R-MSF2-1IFC	6 3/8	2-bolt flange	-	-	-	-	-	-	-	-	-
005-F2	6 3/8	2-bolt flange	UPS 15-58 FRC	6 1/2	2-bolt flange-R	59896343	-	-	-	-	-
			ALPHA2 15-55 FRC, ALPHA1 15-55 FRC	6 1/2	2-bolt flange-R	99163932, 99163934, 99287244, 99287259	-	-	-	-	-
005-F2-2IFC	6 3/8	2-bolt flange	UPS 15-58 FRC	6 1/2	2-bolt flange-R	59896343	-	-	-	-	-
			ALPHA2 15-55 FRC, ALPHA1 15-55 FRC	6 1/2	2-bolt flange-R	99163932, 99163934, 99287244, 99287259	-	-	-	-	-
005-F2-3IFC	6 3/8	2-bolt flange-R	UPS 15-58 FC	6 1/2	2-bolt flange	59896341	-	-	-	-	-
			UPS 15-42 F	6 1/2	2-bolt flange	-	-	59896180		-	
			ALPHA2 15-55 FC, ALPHA1 15-55 FC	6 1/2	2-bolt flange	99163903, 99163906, 99285998, 99287256	-	-	-	-	-
005-VRF2	6 3/8	2-bolt flange	UP 15-42 FC/MR	6 1/2	2-bolt flange*	59896804	-	-	-	-	-
005-VRF2-2IFC	6 3/8	2-bolt flange	UP 15-42 FC/MR	6 1/2	2-bolt flange*	59896804	-	-	-	-	-
005-VVF2	6 3/8	2-bolt flange	UP 26-64 F/VS	6 1/2	2-bolt flange*	52722553	-	-	-	-	-
005-VVF2-2IFC	6 3/8	2-bolt flange	-	-	-	-	-	-	-	-	-
006-F4	6 3/8	2-bolt flange-R	UPS 15-58 FC	6 1/2	2-bolt flange	59896341	-	-	-	-	-
			ALPHA2 15-55 FC, ALPHA1 15-55 FC	6 1/2	2-bolt flange	99163903, 99163906, 99285998, 99287256	-	-	-	-	-
006-F7-IFC	6 3/8	2-bolt flange-R	UPS 15-58 FC	6 1/2	2-bolt flange	59896341	-	-	-	-	-
			ALPHA2 15-55 FC, ALPHA1 15-55 FC	6 1/2	2-bolt flange	99163903, 99163906, 99285998, 99287256	-	-	-	-	-
006-VRF4	6 3/8	2-bolt flange-R	UP 15-42 FC/MR	6 1/2	2-bolt flange	59896804	-	-	-	-	-
006-VRF7-IFC	6 3/8	2-bolt flange-R	UP 15-42 FC/MR	6 1/2	2-bolt flange	59896804	-	-	-	-	-
006-VVF4	6 3/8	2-bolt flange-R	UP 15-42 F/VS	6 1/2	2-bolt flange	59896807	-	-	-	-	-
006-VVF7-IFC	6 3/8	2-bolt flange-R	-	-	-	-	-	-	-	-	-
007-F5	6 3/8	2-bolt flange	UPS 15-58 FRC	6 1/2	2-bolt flange-R	59896343	-	-	-	-	-
			UP 15-42 FR	6 1/2	2-bolt flange-R	59896167	-	59896274	-	-	-
			ALPHA2 15-55 FRC, ALPHA1 15-55 FRC	6 1/2	2-bolt flange	99163932, 99163934, 99287244, 99287259	-	-	-	-	-
007-F5-5	6 3/8	2-bolt flange-R	UPS 15-58 FC	6 1/2	2-bolt flange	59896341	-	-	-	-	-
			UP 15-42 F	6 1/2	2-bolt flange	59896155	-	59896173	-	-	-
			UPS 15-42 F	6 1/2	2-bolt flange	-	-	59896180	-	-	-
			ALPHA2 15-55 FC, ALPHA1 15-55 FC	6 1/2	2-bolt flange	99163903, 99163906, 99285998, 99287256	-	-	-	-	-
007-F5-7-IFC	6 3/8	2-bolt flange	UPS 15-58 FRC	6 1/2	2-bolt flange-R	59896343	-	-	-	-	-
			ALPHA2 15-55 FRC, ALPHA1 15-55 FRC	6 1/2	2-bolt flange	99163932, 99163934, 99287244, 99287259	-	-	-	-	-

* May not match specific competitive flange orientation.

Grundfos provides no guarantee as to the accuracy of competitor information listed herein.

Competitor cross-reference for TACO
Closed systems: Cast iron pump housings

TACO model	Port-to-port length [in]	Flange size/ connection type	Grundfos model	Port-to-port length [in]	Flange size/ connection type	Grundfos product number					
						1 x 115 V	1 x 208 V	1 x 230 V	3 x 208 V	3 x 230 V	3 x 460 V
007-F5-8-IFC	6 3/8	2-bolt flange-R	UPS 15-58 FC	6 1/2	2-bolt flange	59896341	-	-	-	-	-
			ALPHA2 15-55 FC, ALPHA1 15-55 FC	6 1/2	2-bolt flange	99163903, 99163906, 99285998, 99287256	-	-	-	-	-
007-F-MSSF1-IFC	-	-	-	-	-	-	-	-	-	-	-
007-VRF5	6 3/8	2-bolt flange	-	-	-	-	-	-	-	-	-
007-VRF5-2IFC	6 3/8	2-bolt flange	-	-	-	-	-	-	-	-	-
007-VVF5	6 3/8	2-bolt flange	UP 26-64 F/VS	6 1/2	2-bolt flange*	52722553	-	-	-	-	-
007-VVF5-2IFC	6 3/8	2-bolt flange	-	-	-	-	-	-	-	-	-
007e-F2	6 3/8	2-bolt flange-R	ALPHA2 15-55 FC, ALPHA1 15-55 FC	6 1/2	2-bolt flange	99163903, 99163906, 99285998, 99287256	-	-	-	-	-
			ALPHA2 15-55 FRC, ALPHA1 15-55 FRC	6 1/2	2-bolt flange	99163932, 99163934, 99287244, 99287259	-	-	-	-	-
007e-F4	6 3/8	2-bolt flange-R	ALPHA2 15-55 FC, ALPHA1 15-55 FC	6 1/2	2-bolt flange	99163903, 99163906, 99285998, 99287256	-	-	-	-	-
			ALPHA2 15-55 FRC, ALPHA1 15-55 FRC	6 1/2	2-bolt flange	99163932, 99163934, 99287244, 99287259	-	-	-	-	-
008-F6	6 3/8	2-bolt flange	UPS 15-58 FRC	6 1/2	2-bolt flange-R	59896343	-	-	-	-	-
			UP 15-42 FR	6 1/2	2-bolt flange-R	59896167	-	59896274	-	-	-
			ALPHA2 15-55 FRC, ALPHA1 15-55 FRC	6 1/2	2-bolt flange	99163932, 99163934, 99287244, 99287259	-	-	-	-	-
008-F6-3	6 3/8	2-bolt flange-R	UPS 15-58 FC	6 1/2	2-bolt flange	59896341	-	-	-	-	-
			UP 15-42 F	6 1/2	2-bolt flange	59896155	-	59896173	-	-	-
			ALPHA2 15-55 FC, ALPHA1 15-55 FC	6 1/2	2-bolt flange	99163903, 99163906, 99285998, 99287256	-	-	-	-	-
008-F6-1IFC	6 3/8	2-bolt flange-R	UPS 15-58 FC	6 1/2	2-bolt flange	59896341	-	-	-	-	-
			UP 15-42 F	6 1/2	2-bolt flange	59896155	-	59896173	-	-	-
			ALPHA2 15-55 FC, ALPHA1 15-55 FC	6 1/2	2-bolt flange	99163903, 99163906, 99285998, 99287256	-	-	-	-	-
008-VRF6	6 3/8	2-bolt flange	UP 15-42 FC/MR	6 1/2	2-bolt flange*	59896804	-	-	-	-	-
008-VRF6-1IFC	6 3/8	2-bolt flange-R	UP 15-42 FC/MR	6 1/2	2-bolt flange*	59896804	-	-	-	-	-
008-VVF6	6 3/8	2-bolt flange	UP 15-42 F/VS	6 1/2	2-bolt flange*	59896807	-	-	-	-	-
008-VVF6-1IFC	6 3/8	2-bolt flange	-	-	-	-	-	-	-	-	-
009-F5	6 3/8	2-bolt flange-R	UP 15-100 F	6 1/2	2-bolt flange	59896300	-	-	-	-	-
			Magna 32-60 F	6 1/2	2-bolt flange	-	98071395	98071395	98071395	98071395	-
009-F5-IFC	6 3/8	2-bolt flange-R	-	-	-	-	-	-	-	-	-
			Magna 32-60 F	6 1/2	2-bolt flange	-	98071395	98071395	98071395	98071395	-
009-VRF5	6 3/8	2-bolt flange-R	-	-	-	-	-	-	-	-	-
			Magna 32-60 F	6 1/2	2-bolt flange	-	98071395	98071395	98071395	98071395	-
009-VRF5-IFC	6 3/8	2-bolt flange-R	-	-	-	-	-	-	-	-	-
			Magna 32-60 F	6 1/2	2-bolt flange	-	98071395	98071395	98071395	98071395	-
009-VVF5	6 3/8	2-bolt flange-R	UP 26-96 F/VS	6 1/2	2-bolt flange	52722552	-	-	-	-	-
			Magna 32-60 F	6 1/2	2-bolt flange	-	98071395	98071395	98071395	98071395	-
009-VVF5-IFC	6 3/8	2-bolt flange-R	-	-	-	-	-	-	-	-	-
			Magna 32-60 F	6 1/2	2-bolt flange	-	98071395	98071395	98071395	98071395	-
0010-F3	6 3/8	2-bolt flange	-	-	-	-	-	-	-	-	-
			Magna 32-60 F	6 1/2	2-bolt flange	-	98071395	98071395	98071395	98071395	-

* May not match specific competitive flange orientation.

Grundfos provides no guarantee as to the accuracy of competitor information listed herein.

Competitor cross-reference for TACO
Closed systems: Cast iron pump housings

TACO model	Port-to-port length [in]	Flange size/ connection type	Grundfos model	Port-to-port length [in]	Flange size/ connection type	Grundfos product number					
						1 x 115 V	1 x 208 V	1 x 230 V	3 x 208 V	3 x 230 V	3 x 460 V
0010-F3-1IFC	6 3/8	2-bolt flange	-	-	-	-	-	-	-	-	-
0010-MSF1-IFC	6 3/8	4-bolt flange	Magna 32-60 F	6 1/2	2-bolt flange	-	98071395	98071395	98071395	98071395	-
			-	-	-	-	-	-	-	-	-
0010-VRF3	6 3/8	2-bolt flange	Magna 32-60 F	6 1/2	2-bolt flange	-	98071395	98071395	98071395	98071395	-
			-	-	-	-	-	-	-	-	-
0010-VRF3-1IFC	6 3/8	2-bolt flange	Magna 32-60 F	6 1/2	2-bolt flange	-	98071395	98071395	98071395	98071395	-
			-	-	-	-	-	-	-	-	-
0010-VVF3	6 3/8	2-bolt flange	Magna 32-60 F	6 1/2	2-bolt flange	-	98071395	98071395	98071395	98071395	-
			UP 26-64 F/VS	6 1/2	2-bolt flange*	52722553	-	-	-	-	-
0010-VVF3-1IFC	6 3/8	2-bolt flange	Magna 32-60 F	6 1/2	2-bolt flange	-	98071395	98071395	98071395	98071395	-
			-	-	-	-	-	-	-	-	-
0011-F4	6 1/2	2-bolt flange-R	Magna 32-60 F	6 1/2	2-bolt flange	-	98071395	98071395	98071395	98071395	-
			UPS 26-99 FC	6 1/2	2-bolt flange	52722512	-	52722513	-	-	
0011-F4-2IFC	6 1/2	2-bolt flange-R	Magna 32-60 F	6 1/2	2-bolt flange	-	98071395	98071395	98071395	98071395	-
			UPS 26-99 FC	6 1/2	2-bolt flange	52722512	-	52722513		-	
0010-VSF3	6 3/8	2-bolt flange	Magna 32-60 F	6 1/2	2-bolt flange	-	98071395	98071395	98071395	98071395	-
			UP 15-42 F/VS	6 1/2	2-bolt flange*	59896807	-	-	-	-	-
0010-VSF3-1IFC	6 3/8	2-bolt flange	Magna 32-60 F	6 1/2	2-bolt flange	-	98071395	98071395	98071395	98071395	-
			UP 15-42 F/VS	6 1/2	2-bolt flange*	59896807	-	-	-	-	-
0011-VRF4	6 1/2	2-bolt flange-R	Magna 32-60 F	6 1/2	2-bolt flange	-	98071395	98071395	98071395	98071395	-
			-	-	-	-	-	-	-	-	-
0011-VRF4-1IFC	6 1/2	2-bolt flange-R	Magna 32-60 F	6 1/2	2-bolt flange	-	98071395	98071395	98071395	98071395	-
			-	-	-	-	-	-	-	-	-

* May not match specific competitive flange orientation.

Grundfos provides no guarantee as to the accuracy of competitor information listed herein.

Competitor cross-reference for TACO
Closed systems: Cast iron pump housings

TACO model	Port-to-port length [in]	Flange size/ connection type	Grundfos model	Port-to-port length [in]	Flange size/ connection type	Grundfos product number					
						1 x 115 V	1 x 208 V	1 x 230 V	3 x 208 V	3 x 230 V	3 x 460 V
0011-VVF4	6 1/2	2-bolt flange-R	Magna 32-60 F	6 1/2	2-bolt flange	-	98071395	98071395	98071395	98071395	-
			UP 26-96 F/VS	6 1/2	2-bolt flange	52722552	-	-	-	-	-
0011-VVF4-1IFC	6 1/2	2-bolt flange-R	Magna 32-60 F	6 1/2	2-bolt flange	-	98071395	98071395	98071395	98071395	-
			-	-	-	-	-	-	-	-	-
0012-F4	8 1/2	2-bolt flange	Magna 32-60 F	6 1/2	2-bolt flange	-	98071395	98071395	98071395	98071395	-
			-	-	-	-	-	-	-	-	-
0012-F4-3	8 1/2	2-bolt flange	Magna 40-120 F	8 1/2	2-bolt flange	-	-	96734489	-	96734489	-
			-	-	-	-	-	-	-	-	-
0012-F4-IFC	8 1/2	2-bolt flange-R	Magna 40-120 F	8 1/2	2-bolt flange	-	-	96734489	-	96734489	-
			UPS 43-44 FC	8 1/2	2-bolt flange	52722514	-	52722515	-	-	-
0012-F4-1	8 1/2	2" flange	Magna 40-120 F	8 1/2	2-bolt flange	-	-	96734489	-	96734489	-
			UPS 50-44 FC	8 1/2	2" flange	52722557	-	52722558	-	-	-
0012-VRF4	8 1/2	1 1/2" flange	Magna 40-120 F	8 1/2	2-bolt flange	-	-	96734489	-	96734489	-
			-	-	-	-	-	-	-	-	-
0012-VRF4-1	8 1/2	2" flange	Magna 40-120 F	8 1/2	2-bolt flange	-	-	96734489	-	96734489	-
			-	-	-	-	-	-	-	-	-
0012-VRF4-IFC	8 1/2	1 1/2" flange-R	Magna 40-120 F	8 1/2	2-bolt flange	-	-	96734489	-	96734489	-
			-	-	-	-	-	-	-	-	-
0012-VVF4	8 1/2	1 1/2" flange	Magna 40-120 F	8 1/2	2-bolt flange	-	-	96734489	-	96734489	-
			-	-	-	-	-	-	-	-	-
0012-VVF4-1	8 1/2	2" flange	Magna 40-120 F	8 1/2	2-bolt flange	-	-	96734489	-	96734489	-
			-	-	-	-	-	-	-	-	-
0012-VVF4-IFC	8 1/2	1 1/2" flange-R	Magna 40-120 F	8 1/2	2-bolt flange	-	-	96734489	-	96734489	-
			-	-	-	-	-	-	-	-	-
0013-F3	6 1/2	2-bolt flange-R	UP 26-116 F	6 1/2	2-bolt flange		-	52722377	-	-	-
			UPS 26-150 F	6 1/2	2-bolt flange	95906630	95906631	95906631	-	-	-
			Magna 32-100 F	6 1/2	2-bolt flange	-	98071396	98071396	98071396	98071396	-
0013-F3-1IFC	6 1/2	2-bolt flange-R	Magna 32-100 F	6 1/2	2-bolt flange	-	98071396	98071396	98071396	98071396	-
0013-VRF3	6 1/2	2-bolt flange-R	Magna 32-100 F	6 1/2	2-bolt flange	-	98071396	98071396	98071396	98071396	-
0013-VRF3-1IFC	6 1/2	2-bolt flange-R	Magna 32-100 F	6 1/2	2-bolt flange	-	98071396	98071396	98071396	98071396	-
0013-VVF3	6 1/2	2-bolt flange-R	Magna 32-100 F	6 1/2	2-bolt flange	-	98071396	98071396	98071396	98071396	-
0013-VVF3-1IFC	6 1/2	2-bolt flange-R	Magna 32-100 F	6 1/2	2-bolt flange	-	98071396	98071396	98071396	98071396	-
0014-F1	6 1/2	2-bolt flange-R	UPS 26-99 FC	6 1/2	2-bolt flange	52722512	-	52722513	-	-	-
			Magna 32-100 F	6 1/2	2-bolt flange	-	98071396	98071396	98071396	98071396	-
0014-F1-1IFC	6 1/2	2-bolt flange-R	UPS 26-99 FC	6 1/2	2-bolt flange	52722512	-	52722513	-	-	-
			Magna 32-100 F	6 1/2	2-bolt flange	-	98071396	98071396	98071396	98071396	-
0014-VRF1	6 1/2	2-bolt flange-R	Magna 32-100 F	6 1/2	2-bolt flange	-	98071396	98071396	98071396	98071396	-
0014-VRF1-1IFC	6 1/2	2-bolt flange-R	Magna 32-100 F	6 1/2	2-bolt flange	-	98071396	98071396	98071396	98071396	-
0014-VVF1	6 1/2	2-bolt flange-R	Magna 32-100 F	6 1/2	2-bolt flange	-	98071396	98071396	98071396	98071396	-
0014-VVF1-1IFC	6 1/2	2-bolt flange-R	Magna 32-100 F	6 1/2	2-bolt flange	-	98071396	98071396	98071396	98071396	-
0015-MSF2-IFC	6 1/2	2-bolt flange	UPS 15-58 FRC	6 1/2	2-bolt flange-R	59896343	-	-	-	-	-
			ALPHA2 15-55 FRC, ALPHA1 15-55 FRC	6 1/2	2-bolt flange	99163932, 99163934, 99287244, 99287259	-	-	-	-	-
0015-MSF2-1IFC	6 1/2	2-bolt flange-R	UPS 15-58 FC	6 1/2	2-bolt flange	59896341	-	-	-	-	-
			ALPHA2 15-55 FC, ALPHA1 15-55 FC	6 1/2	2-bolt flange	99163903, 99163906, 99285998, 99287256	-	-	-	-	-

* May not match specific competitive flange orientation.

Grundfos provides no guarantee as to the accuracy of competitor information listed herein.

Competitor cross-reference for TACO
Closed systems: Cast iron pump housings

TACO model	Port-to-port length [in]	Flange size/ connection type	Grundfos model	Port-to-port length [in]	Flange size/ connection type	Grundfos product number					
						1 x 115 V	1 x 208 V	1 x 230 V	3 x 208 V	3 x 230 V	3 x 460 V
0015e-F2	6 3/8	2-bolt flange-R	ALPHA2 15-55 FC, ALPHA1 15-55 FC	6 1/2	2-bolt flange	99163903, 99163906, 99285998, 99287256					
			ALPHA2 15-55 FRC, ALPHA1 15-55 FRC	6 1/2	2-bolt flange	99163932, 99163934, 99287244, 99287259					
0015e-F4	6 3/8	2-bolt flange-R	ALPHA2 15-55 FC, ALPHA1 15-55 FC	6 1/2	2-bolt flange	99163903, 99163906, 99285998, 99287256					
			ALPHA2 15-55 FRC, ALPHA1 15-55 FRC	6 1/2	2-bolt flange	99163932, 99163934, 99287244, 99287259					
1400-10	6 3/8	2-bolt flange-R	UPS 26-99 FC	6 1/2	2-bolt flange	52722512	-	52722513	-	-	-
			Magna 32-60 F	6 1/2	2-bolt flange	-	98071395	98071395	98071395	98071395	-
1400-20	6 3/8	2-bolt flange-R	UPS 26-150 F	6 1/2	2-bolt flange	95906630	95906631	95906631	-	-	-
			Magna 32-100 F	6 1/2	2-bolt flange	-	98071396	98071396	98071396	98071396	-
1400-30	8 1/2	2-bolt flange-R	UPS 26-150 F	6 1/2	2-bolt flange	95906630	95906631	95906631	-	-	-
			Magna 32-100 F	6 1/2	2-bolt flange	-	98071396	98071396	98071396	98071396	-
1400-40	8 1/2	2-bolt flange-R	UPS 43-100 F	8 1/2	2-bolt flange	95906636	95906637	95906637	-	-	-
			Magna 32-100 F	6 1/2	2-bolt flange	-	98071396	98071396	98071396	98071396	-
1400-45	6 3/8	2-bolt flange-R	UPS 26-150 F	6 1/2	2-bolt flange	95906630	95906631	95906631	-	-	-
			Magna 40-120 F	8 1/2	2-bolt flange	-	-	96734489	-	96734489	-
1400-50	6 3/8	2" bolt flange	UPS 40-160/2	11 1/2	2" 4-bolt flange*						
			Magna 40-120 F	8 1/2	2-bolt flange	-	-	96734489	-	96734489	-
1400-50/2	6 3/8	2" bolt flange	UPS 40-160/2	11 1/2	2" 4-bolt flange*						
1400-60	8 1/2	2-bolt flange-R	UPS 43-100 F	8 1/2	2-bolt flange	95906636	95906637	95906637	-	-	-
1400-65	8 1/2	2-bolt flange-R	UPS 50-60 F	8 1/2	4-bolt flange	97523134	97523135	97523135	-	-	-
1400-70	8 1/2	4-bolt flange	UPS 50-80/4	11 1/2	2" 4-bolt flange						
1400-70/3	8 1/2	4-bolt flange	UPS 50-80/4	11 1/2	2" 4-bolt flange						
2400-10	6 3/8	2-bolt flange-R	UPS 26-99 FC	6 1/2	2-bolt flange	52722512	-	52722513	-	-	-
			Magna 32-60 F	6 1/2	2-bolt flange	-	98071395	98071395	98071395	98071395	-
2400-20	6 3/8	2-bolt flange-R	UPS 26-150 F	6 1/2	2-bolt flange	95906630	95906631	95906631	-	-	-
			Magna 32-100 F	6 1/2	2-bolt flange	-	98071396	98071396	98071396	98071396	-
2400-30	8 1/2	2-bolt flange-R	UPS 26-150 F	6 1/2	2-bolt flange	95906630	95906631	95906631	-	-	-
			Magna 32-100 F	6 1/2	2-bolt flange	-	98071396	98071396	98071396	98071396	-
2400-40	8 1/2	2-bolt flange-R	UPS 43-100 F	8 1/2	2-bolt flange	95906636	95906637	95906637	-	-	-
			Magna 32-100 F	6 1/2	2-bolt flange	-	98071396	98071396	98071396	98071396	-
2400-45	6 3/8	2-bolt flange-R	UPS 26-150 F	6 1/2	2-bolt flange	95906630	95906631	95906631	-	-	-
			Magna 40-120 F	8 1/2	2-bolt flange	-	-	96734489	-	96734489	-
2400-50	6 3/8	2-bolt flange-R	UPS 40-160/2	11 1/2	2" 4-bolt flange*						
			Magna 40-120 F	8 1/2	2-bolt flange	-	-	96734489	-	96734489	-
2400-50/2	6 3/8	2" 2-bolt flange	UPS 40-160/2	11 1/2	2" 4-bolt flange*						
2400-60	8 1/2	2" 4-bolt flange	UPS 43-100 F	8 1/2	2-bolt flange	95906636	95906637	95906637	-	-	-
2400-65	8 1/2	2" 4-bolt flange	UPS 50-60 F	8 1/2	4-bolt flange	97523134	97523135	97523135	-	-	-
2400-70	8 1/2	2" 4-bolt flange	UPS 50-80/4	11 1/2	2" 4-bolt flange*						
2400-70/3	8 1/2	3" 4-bolt flange	UPS 50-80/4	11 1/2	2" 4-bolt flange*						

* May not match specific competitive flange orientation.

Grundfos provides no guarantee as to the accuracy of competitor information listed herein.

Reference for replacing Bell & Gossett models

Open systems: Stainless steel and lead-free bronze pump housings

Competitor cross-reference for Bell & Gossett
Open systems: Stainless steel and lead-free bronze pump housings

Bell & Gossett model	Port-to-port length [in]	Flange size/ connection type	Grundfos model	Port-to-port length [in]	Flange size/ connection type	Grundfos product number					
						1 x 115 V	1 x 208 V	1 x 230 V	3 x 208 V	3 x 230 V	3 x 460 V
NBF-8S/LW	5	1/2" sweat	UP 15-10 B5	5	1/2" sweat	59896213	-	-	-	-	-
NBF-8S/P	5	1/2" sweat	UP 15-10 B5/LC	5	1/2" sweat	59896214	-	-	-	-	-
NBF-8S/TP	5	1/2" sweat	UP 15-10 B5/TLC	5	1/2" sweat	99452454	-	-	-	-	-
NBF-9U/LW	6 3/8	Union	UPS 15-29 SU	5 7/8	1 1/4" U	59896775	-	59896784	-	-	-
NBF-9U/P	6 3/8	Union	UPS 15-29 SUC/LC	5 7/8	1 1/4" U	59896776	-	-	-	-	-
NBF-9U/TP	6 3/8	Union	UPS 15-29 SUC/TLC	5 7/8	1 1/4" U	99452462	-	-	-	-	-
NBF-10S/LW	5	1/2" sweat	UP 15-18 B5	5	1/2" sweat	59896114	-	59896118	-	-	-
NBF-10S/P	5	1/2" sweat	UP 15-18 B5/LC	5	1/2" sweat	59896211	-	-	-	-	-
NBF-10S/TP	5	1/2" sweat	UP 15-18 B5/TLC	5	1/2" sweat	99452460	-	-	-	-	-
NBF-12U/LW	6 3/8	Union	UPS 15-35 SUC	5 7/8	1 1/4" U	59896778	-	-	-	-	-
NBF-12F/LW	6 3/8	2-bolt flange	UPS 15-35 SFC	6 1/2	2-bolt flange	59896772	-	-	-	-	-
			ALPHA2 15-55 SFC, ALPHA1 15-55 SFC	6 1/2	2-bolt flange*	99163937, 99163972, 99287250, 99287262	-	-	-	-	-
NBF-18S	5	1/2" sweat	UP 15-42 B5	5	1/2" sweat	59896145	-	59896142	-	-	-
NBF-22U	6 3/8	Union	UPS 15-55 SUC	5 7/8	1 1/4" U	-	-	59896786	-	-	-
NBF-22	6 3/8	2-bolt flange	UPS 15-55 SFC	6 1/2	2-bolt flange	59896773	-	-	-	-	-
		2-bolt flange	ALPHA2 15-55 SFC, ALPHA1 15-55 SFC	6 1/2	2-bolt flange*	99163937, 99163972, 99287250, 99287262	-	-	-	-	-
NBF-25	6 3/8	2-bolt flange	UPS 15-55 SFC	6 1/2	2-bolt flange	59896773	-	-	-	-	-
		2-bolt flange	ALPHA2 15-55 SFC, ALPHA1 15-55 SFC	6 1/2	2-bolt flange*	99163937, 99163972, 99287250, 99287262	-	-	-	-	-
NBF-33	6 3/8	2-bolt flange	UPS 43-44 BFC	8 1/2	2-bolt flange	52722520	-	52722521	-	-	-
			Magna 32-60 FN	6 1/2	2-bolt flange	-	98052802	98052802	98052802	98052802	-
NBF-36	6 3/8	2-bolt flange	UPS 26-150 SF	6 1/2	2-bolt flange	95906632	95906633	95906633	-	-	-
			Magna 32-100 FN	6 1/2	2-bolt flange	-	98052760	98052760	98052760	98052760	-
NBF-45	8 1/2	2-bolt flange	UP 43-75 BF	8 1/2	2-bolt flange	52722370	52722369	-	-	-	-
			Magna 32-100 FN	6 1/2	2-bolt flange	-	98052760	98052760	98052760	98052760	-
SSF-9U/LW	6 3/8	Union	UPS 15-29 SU	5 7/8	1 1/4" U	59896775	-	59896784	-	-	-
SSF-9U/P	6 3/8	Union	UPS 15-29 SUC/LC	5 7/8	1 1/4" U	59896776	-	-	-	-	-
SSF-9U/TP	6 3/8	Union	UPS 15-29 SUC/TLC	5 7/8	1 1/4" U	99452462	-	-	-	-	-
SSF-12F/LW	6 3/8	2-bolt flange	UPS 15-35 SFC	6 1/2	2-bolt flange	59896772	-	-	-	-	-
SSF-12U/LW	6 3/8	Union	UPS 15-35 SUC	6 1/2	1 1/4" U	59896778	-	-	-	-	-
SSF-22	6 3/8	2-bolt flange	UPS 15-55 SFC	6 1/2	2-bolt flange	59896773	-	-	-	-	-
			ALPHA2 15-55 SFC, ALPHA1 15-55 SFC	6 1/2	2-bolt flange*	99163937, 99163972, 99287250, 99287262	-	-	-	-	-
SSF-22U	6 3/8	Union	UPS 15-55 SUC	5 7/8	1 1/4" U	-	-	59896786			
LR-15B	6 3/8	2-bolt flange	UPS 15-55 SFC	6 1/2	2-bolt flange	59896773	-	-	-	-	-
			ALPHA2 15-55 SFC, ALPHA1 15-55 SFC	6 1/2	2-bolt flange*	99163937, 99163972, 99287250, 99287262	-	-	-	-	-
LR-15BWR	6 3/8	2-bolt flange	UPS 26-99 SFC	8 1/2	2-bolt flange	98961763	-	98961765	-	-	-
			Magna 32-60 FN	6 1/2	2-bolt flange	-	98052802	98052802	98052802	98052802	-
Series 100 B	6 3/8	2-bolt flange	UPS 43-44 BFC	8 1/2	2-bolt flange	52722520	-	52722521	-	-	-
			Magna 32-60 FN	6 1/2	2-bolt flange	-	98052802	98052802	98052802	98052802	-
Series HV B	8 1/2	2-bolt flange-R	UPS 43-44 BFC	8 1/2	2-bolt flange	52722520	-	52722521	-	-	-
			Magna 32-60 FN	6 1/2	2-bolt flange	-	98052802	98052802	98052802	98052802	-

* May not match specific competitive flange orientation.

Grundfos provides no guarantee as to the accuracy of competitor information listed herein.

Competitor cross-reference for Bell & Gossett
Open systems: Stainless steel and lead-free bronze pump housings

Bell & Gossett model	Port-to-port length [in]	Flange size/ connection type	Grundfos model	Port-to-port length [in]	Flange size/ connection type	Grundfos product number					
						1 x 115 V	1 x 208 V	1 x 230 V	3 x 208 V	3 x 230 V	3 x 460 V
Series PR B	8 1/2	2-bolt flange-R	UPS 15-55 SFC	6 1/2	2-bolt flange	59896773	-	-	-	-	-
			Magna 32-60 FN	6 1/2	2-bolt flange	-	98052802	98052802	98052802	98052802	-
2" AB	8 1/2	2" flange-R	UPS 50-60 SF	8 1/2	4-bolt flange	97523136	97523137	97523137	-	-	-
			Magna 40-120 FN	8 1/2	3/4" to 1 1/2"	-	-	96734633	-	96734633	-
PL-30B	8 5/8	2-bolt flange	UPS 26-99 SF	6 1/2	2-bolt flange	98961763	-	-	-	-	-
			Magna 32-60 FN	6 1/2	2-bolt flange	-	98052760	98052760	98052760	98052760	-
PL-36B	8 5/8	2-bolt flange	UPS 26-150 SF	6 1/2	2-bolt flange	95906632	95906633	95906633	-	-	-
			Magna 32-100 FN	6 1/2	2-bolt flange	-	98052760	98052760	98052760	98052760	-
PL-45B	9 3/8	2-bolt flange	UPS 43-100 SF	8 1/2	2-bolt flange	95906638	95906639	95906639	-	-	-
			Magna 32-100 FN	6 1/2	2-bolt flange	-	98052760	98052760	98052760	98052760	-
PL-50B	9 3/8	2-bolt flange	UPS 43-100 SF	8 1/2	2-bolt flange	95906638	95906639	95906639	-	-	-
			Magna 32-100 FN	6 1/2	2-bolt flange	-	98052760	98052760	98052760	98052760	-
PL-55B	9 9/16	2-bolt flange	UPS 26-150 SF	6 1/2	2-bolt flange	95906632	95906633	95906633	-	-	-
			Magna 40-120 FN	8 1/2	2-bolt flange	-	-	96734633	-	96734633	-
PL-75B	9 15/16	2"	UPS 50-60 SF	8 1/2	4-bolt flange	97523136	97523137	97523137	-	-	-
			Magna 40-120 FN	8 1/2	2-bolt flange	-	-	96734633	-	96734633	-

* May not match specific competitive flange orientation.

Grundfos provides no guarantee as to the accuracy of competitor information listed herein.

Closed systems: Cast iron pump housings

Competitor cross-reference for Bell & Gossett
Closed systems: Cast iron pump housings

Bell & Gossett model	Port-to-port length [in]	Flange size/ connection type	Grundfos model	Port-to-port length [in]	Flange size/ connection type	Grundfos product number					
						1 x 115 V	1 x 208 V	1 x 230 V	3 x 208 V	3 x 230 V	3 x 460 V
NRF-9F/ LW	6 3/8	2-bolt flange-R	UP 15-42 FR	6 1/2	2-bolt flange-R	59896167	-	59896274	-	-	-
			UPS 15-58 FRC	6 1/2	2-bolt flange-R	59896343	-	-	-	-	-
			ALPHA2 15-55 FRC, ALPHA1 15-55 FRC	6 1/2	2-bolt flange-R	99163932, 99163934, 99287244, 99287259	-	-	-	-	-
NRF-22	6 3/8	2-bolt flange-R	UP 15-42 FR	6 1/2	2-bolt flange-R	59896167	-	59896274	-	-	-
			UPS 15-42 FR	6 1/2	2-bolt flange-R	59896167	-	59896274	-	-	-
			UPS 15-58 FRC	6 1/2	2-bolt flange-R	59896343	-	-	-	-	-
			ALPHA2 15-55 FRC, ALPHA1 15-55 FRC	6 1/2	2-bolt flange	99163932, 99163934, 99287244, 99287259	-	-	-	-	-
NRF-25	6 3/8	2-bolt flange	UPS15-58 FC	6 1/2	2-bolt flange	59896341	-	-	-	-	-
			ALPHA2 15-55 FC, ALPHA1 15-55 FC	6 1/2	2-bolt flange	99163903, 99163906, 99285998, 99287256	-	-	-	-	-
NRF-33	6 3/8	2-bolt flange	UPS 43-44 FC	8 1/2	2-bolt flange	52722514	-	52722515	-	-	-
			Magna 32-60 F	6 1/2	2-bolt flange	-	98071395	98071395	98071395	98071395	-
NRF-36	6 3/8	2-bolt flange	UPS 26-150 F	6 1/2	2-bolt flange	95906630	95906631	95906631	-	-	-
			UPS 43-100 F	8 1/2	2-bolt flange	95906636	95906637	95906637	-	-	-
			Magna 32-100 F	6 1/2	2-bolt flange	-	98071396	98071396	98071396	98071396	-
NRF-45	8 1/2	2-bolt flange	UP 43-75 FC	8 1/2	2-bolt flange	52722373	-	52722372	-	-	-
			UPS 43-100 F	8 1/2	2-bolt flange	95906636	95906637	95906637	-	-	-
			Magna 32-100 F	6 1/2	2-bolt flange	-	98071396	98071396	98071396	98071396	-
LR-20WR	6 3/8	2-bolt flange	UPS 43-44 FC	8 1/2	2-bolt flange	52722514	-	52722515	-	-	-
			Magna 32-60 F	6 1/2	2-bolt flange	-	98071395	98071395	98071395	98071395	-
Series 100	6 3/8	2-bolt flange	UPS 43-44 FC	8 1/2	2-bolt flange	52722514	-	52722515	-	-	-
			Magna 32-60 F	6 1/2	2-bolt flange	-	98071395	98071395	98071395	98071395	-

* May not match specific competitive flange orientation.

Grundfos provides no guarantee as to the accuracy of competitor information listed herein.

Competitor cross-reference for Bell & Gossett
Closed systems: Cast iron pump housings

Bell & Gossett model	Port-to-port length [in]	Flange size/ connection type	Grundfos model	Port-to-port length [in]	Flange size/ connection type	Grundfos product number					
						1 x 115 V	1 x 208 V	1 x 230 V	3 x 208 V	3 x 230 V	3 x 460 V
Series HV	8 1/2	2-bolt flange-R	UPS 43-44 FC	8 1/2	2-bolt flange	52722514	-	52722515	-	-	-
			Magna 32-60 F	6 1/2	2-bolt flange	-	98071395	98071395	98071395	98071395	-
Series PR	8 1/2	2-bolt flange	UPS 26-99 FC	6 1/2	2-bolt flange	52722512	-	52722513	-	-	-
			Magna 32-60 F	6 1/2	2-bolt flange	-	98071395	98071395	98071395	98071395	-
2"	8 1/2	2" flange-R	UPS 50-44 FC	8 1/2	2" flange	52722557	-	52722558	-	-	-
			Magna 40-120 F	8 1/2	2-bolt flange	-	-	96734489	-	96734489	-
PL-30	8 5/8	2-bolt flange	UPS 26-99 FC	6 1/2	2-bolt flange	52722512	-	52722513	-	-	-
			Magna 32-60 F	6 1/2	2-bolt flange	-	98071395	98071395	98071395	98071395	-
PL-36	8 5/8	2-bolt flange	UPS 26-150 F	6 1/2	2-bolt flange	95906630	95906631	95906631	-	-	-
			Magna 32-100 F	6 1/2	2-bolt flange	-	98071396	98071396	98071396	98071396	-
PL-45	9 1/8	2-bolt flange	UPS 43-100 F	8 1/2	2-bolt flange	95906636	95906637	95906637	-	-	-
			Magna 32-100 F	6 1/2	2-bolt flange	-	98071396	98071396	98071396	98071396	-
PL-50	9 1/8	2-bolt flange	UPS 43-100 F	8 1/2	2-bolt flange	95906636	95906637	95906637	-	-	-
			Magna 32-100 F	6 1/2	2-bolt flange	-	98071396	98071396	98071396	98071396	-
PL-55	9 9/16	2-bolt flange	UPS 26-150 F	6 1/2	2-bolt flange	95906630	95906631	95906631	-	-	-
			Magna 40-120 F	8 1/2	2-bolt flange	-	-	96734489	-	96734489	-
PL-75	9 15/16	2"	UPS 50-60 F	8 1/2	4-bolt flange	97523134	97523135	97523135	-	-	-
			Magna 40-120 F	8 1/2	2-bolt flange	-	-	96734489	-	96734489	-

* May not match specific competitive flange orientation.

Grundfos provides no guarantee as to the accuracy of competitor information listed herein.

Reference for replacing Laing models

Open systems: Stainless steel and lead-free bronze pump housings

Competitor cross-reference for Laing
Open systems: Stainless steel and lead-free bronze pump housings

Laing model	Port-to-port length [in]	Flange size/ connection type	Grundfos model	Port-to-port length [in]	Flange size/ connection type	Grundfos product number					
						1 x 115 V	1 x 208 V	1 x 230 V	3 x 208 V	3 x 230 V	3 x 460 V
SM-303-BS	2 9/16	1/2" sweat	UP10-16 PM B5/LC	3 1/8	1/2" sweat		98420206		-	-	-
SM-303-BSR	2 9/16	1/2" sweat	UP 10-16 A PM B5/LC	3 1/8	1/2" sweat		98420222		-	-	-
SM-303-BSW	2 9/16	1/2" sweat	UP 10-16 PM B5/LC	3 1/8	1/2" sweat		98420206		-	-	-
SM-303-BSRW	2 9/16	1/2" sweat	UP 10-16 A PM B5/LC	3 1/8	1/2" sweat		98420222		-	-	-
SM-303-BT	2 9/16	1/2" FNPT	UP 10-16 PM BN5/LC	3 1/8	1/2" FNPT		98420210		-	-	-
SM-303-BTR	2 9/16	1/2" FNPT	UP 10-16 A PM BN5/LC	3 1/8	1/2" FNPT		98420223		-	-	-
SM-303-BTW	2 9/16	1/2" FNPT	UP 10-16 PM BN5/LC	3 1/8	1/2" FNPT		98420210		-	-	-
SM-303-BTRW	2 9/16	1/2" FNPT	UP 10-16 A PM BN5/LC	3 1/8	1/2" FNPT		98420223		-	-	-
SMT-303-BS	2 9/16	1/2" sweat	UP 10-16 A PM B5/LC	3 1/8	1/2" sweat		98420222		-	-	-
SMT-303-BSR	2 9/16	1/2" sweat	UP 10-16 A PM B5/LC	3 1/8	1/2" sweat		98420222		-	-	-
SMT-303-BSW	2 9/16	1/2" sweat	UP 10-16 A PM B5/LC	3 1/8	1/2" sweat		98420222		-	-	-
SMT-303-BSRW	2 9/16	1/2" sweat	UP 10-16 A PM B5/LC	3 1/8	1/2" sweat		98420222		-	-	-
SMT-303-BT	2 9/16	1/2" FNPT	UP 10-16 A PM BN5/LC	3 1/8	1/2" FNPT		98420223		-	-	-
SMT-303-BTR	2 9/16	1/2" FNPT	UP 10-16 A PM BN5/LC	3 1/8	1/2" FNPT		98420223		-	-	-
SMT-303-BTW	2 9/16	1/2" FNPT	UP 10-16 A PM BN5/LC	3 1/8	1/2" FNPT		98420223		-	-	-
SMT-303-BTRW	2 9/16	1/2" FNPT	UP 10-16 A PM BN5/LC	3 1/8	1/2" FNPT		-	98420223	-	-	-
SM-909-BS-14	6	1/2" sweat	UP 15-18 B5	5	1/2" sweat	59896114	-	59896118	-	-	-
SM-909-BSW-14	6	1/2" sweat	UP 15-18 B5/LC	5	1/2" sweat	59896211	-	-	-	-	-
SM-909-BSC-14	6	1/2" sweat	UP 15-18 B5*	5	1/2" sweat	59896114	-	-	-	-	-
SM-909-BSCW-14	6	1/2" sweat	UP 15-18 B5/LC*	5	1/2" sweat	59896211	-	-	-	-	-
SMT-909-BS-14	6	1/2" sweat	UP 15-18 B5**	5	1/2" sweat	59896114	-	-	-	-	-
SMT-909-BSW-14	6	1/2" sweat	UP 15-18 B5/TLC	5	1/2" sweat	99452460	-	-	-	-	-
SMT-909-BSC-14	6	1/2" sweat	UP 15-18 B5/TLC	5	1/2" sweat	99452460	-	-	-	-	-
SMT-909-BSCW-14	6	1/2" sweat	UP 15-18 B5/TLC	5	1/2" sweat	99452460	-	-	-	-	-
SM-909-BS-14	6	3/4" sweat	UP 15-18 B7	5	3/4" sweat	59896121	-	59896119	-	-	-
SM-909-BSW-14	6	3/4" sweat	UP 15-18 B7/LC	5	3/4" sweat	59896229	-	-	-	-	-
SM-909-BSC-14	6	3/4" sweat	UP 15-18 B7*	5	3/4" sweat	59896121	-	-	-	-	-
SM-909-BSCW-14	6	3/4" sweat	UP 15-18 B7/LC*	5	3/4" sweat	59896229	-	-	-	-	-
SM-909-BS-18	6	3/4" sweat	UP 15-18 B7	5	3/4" sweat	59896121	-	-	-	-	-
SM-909-BSW-18	6	3/4" sweat	UP 15-18 B7/LC	5	3/4" sweat	59896229	-	-	-	-	-
SMT-909-BS-14	6	3/4" sweat	UP 15-18 B7/LC	5	3/4" sweat	59896229	-	-	-	-	-
SMT-909-BSW-14	6	3/4" sweat	UP 15-18 B5/TLC	5	3/4" sweat	99452460	-	-	-	-	-
SMT-909-BSC-14	6	3/4" sweat	UP 15-18 B5/TLC*	5	3/4" sweat	99452460	-	-	-	-	-
SMT-909-BSCW-14	6	3/4" sweat	UP 15-18 B5/TLC*	5	3/4" sweat	99452460	-	-	-	-	-
SM-909-BF-14	6 1/2	2-bolt flange	ALPHA2 15-55 SFC, ALPHA1 15-55 SFC	6 1/2	2-bolt flange*	99163937, 99163972, 99287250, 99287262	-	-	-	-	-
SM-909-BFW-14	6 1/2	2-bolt flange	ALPHA2 15-55 SFC, ALPHA1 15-55 SFC	6 1/2	2-bolt flange*	99163937, 99163972, 99287250, 99287262	-	-	-	-	-
SM-909-BF-18	6 1/2	2-bolt flange	UPS 15-55 SFC	6 1/2	2-bolt flange	59896773	-	-	-	-	-
			ALPHA2 15-55 SFC, ALPHA1 15-55 SFC	6 1/2	2-bolt flange*	99163937, 99163972, 99287250, 99287262	-	-	-	-	-
SM-909-BFW-18	6 1/2	2-bolt flange	ALPHA2 15-55 SFC, ALPHA1 15-55 SFC	6 1/2	2-bolt flange*	99163937, 99163972, 99287250, 99287262	-	-	-	-	-
SMT-909-BF-14	6 1/2	2-bolt flange	UP 15-42 BUC5**	6 1/2	2-bolt flange	59896150	-	-	-	-	-
SMT-909-BFW-14	6 1/2	2-bolt flange	ALPHA2 15-55 SFC, ALPHA1 15-55 SFC	6 1/2	2-bolt flange*	99163937, 99163972, 99287250, 99287262	-	-	-	-	-
SMT-909-BF-18	6 1/2	2-bolt flange	UPS 15-55 SFC	6 1/2	2-bolt flange	59896773	-	-	-	-	-

* May not match specific competitive flange orientation.

Grundfos provides no guarantee as to the accuracy of competitor information listed herein.

Competitor cross-reference for Laing
Open systems: Stainless steel and lead-free bronze pump housings

Laing model	Port-to-port length [in]	Flange size/ connection type	Grundfos model	Port-to-port length [in]	Flange size/ connection type	Grundfos product number					
						1 x 115 V	1 x 208 V	1 x 230 V	3 x 208 V	3 x 230 V	3 x 460 V
E1-BCANCT1W-06	4 1/2	W/supply 1/ 2" MNPT, F/ supply 3/8" MNPT	Comfort System	6 1/2	2-bolt flange	595916, 99452459	-	-	-	-	-
E1-BCANRT1W-06/T	4 1/2		Comfort System	6 1/2	2-bolt flange	595916, 99452459	-	-	-	-	-
E1-BCSVNN1-06	2 1/2	1/2" sweat	UP10-16 PM B5/LC	3 1/8	1/2" sweat	98420206			-	-	-
E1-BCSVNN1W-06	2 1/2	1/2" sweat							-	-	-
E1-BCSNRN1W-06	2 1/2	1/2" sweat	UP 10-16 A PM B5/LC	3 1/8	1/2" sweat	98420222			-	-	-
E1-BCSNRN1W-06	2 1/2	1/2" sweat							-	-	-
E1-BCTVNN1-06	2 1/2	1/2" FPT	UP 10-16 PM BN5/LC	3 1/8	1/2" FNPT	98420210			-	-	-
E1-BCTVNN1W-06	2 1/2	1/2" FPT							-	-	-
E1-BCTNRN1W-06	2 1/2	1/2" FPT	UP 10-16 A PM BN5/LC	3 1/8	1/2" FNPT	98420223			-	-	-
E1-BCTNRN1W-06	2 1/2	1/2" FPT							-	-	-
E3-BCTVNN1W-11	2 1/2	1/2" FPT	-	-	-	-	-	-	-	-	-
E3-BCUVNN1W-11	5 1/2	Union	UPS 15-35 SUC/TLC	6 1/2	GU 125	99452478	-	-	-	-	-
E3-BCSVNN1W-11	2 1/2	1/2" sweat	-	-	-	-	-	-	-	-	-
E10-BCANCT1W-23	4 1/2	W/supply 1/ 2" MNPT, F/ supply 3/8" MNPT	-	-	-	-	-	-	-	-	-
			-	-	-	-	-	-	-	-	-
E10-BCFVNN1W-24	6 1/2	2-bolt flange	-	-	-	-	-	-	-	-	-
E10-BCSVNN1W-19	6	1/2" sweat	-	-	-	-	-	-	-	-	-
E10-BCSVNN1W-22	6	3/4" sweat	-	-	-	-	-	-	-	-	-
E10-BCUVNN1W-19	6	Union	-	-	-	-	-	-	-	-	-

* May not match specific competitive flange orientation.

Grundfos provides no guarantee as to the accuracy of competitor information listed herein.

Purchase thermostatic controls

595443 Aquastat kit, 1/2" clip on 85-105 °F
595444 Aquastat kit, 3/4" clip on 85-105 °F
595656 Aquastat kit, 1/2" clip on 105-115 °F
595657 Aquastat kit, 3/4" clip on 105-115 °F

** Purchase timer control

599388 24-hour programmable clock/timer

Reference for replacing Armstrong models

Open systems: Stainless steel and lead-free bronze pump housings

Competitor cross-reference for Armstrong
Open systems: Stainless steel and lead-free bronze pump housings

Armstrong model	Port-to-port length [in]	Flange size/ connection type	Grundfos model	Port-to-port length [in]	Flange size/ connection type	Grundfos product number					
						1 x 115 V	1 x 208 V	1 x 230 V	3 x 208 V	3 x 230 V	3 x 460 V
Astro 20B050S	5	1/2" sweat	UP 15-10 B5	5	1/2" sweat	59896213	-	-	-	-	-
Astro 20B050S-LC	5	1/2" sweat	UP 15-10 B5/LC	5	1/2" sweat	59896214	-	-	-	-	-
Astro 20B050S-T	5	1/2" sweat	UP 15-10 B5/TLC	5	1/2" sweat	99452454	-	-	-	-	-
Astro 20B050S-TA	5	1/2" sweat	-	-	-	-	-	-	-	-	-
Astro 20B075S	5	3/4" sweat	UP 15-10 B7	6 3/8	3/4" sweat	59896226	-	-	-	-	-
Astro 20B075S-LC	5	3/4" sweat	UP 15-10 B7/LC	6 3/8	3/4" sweat	59896209	-	-	-	-	-
Astro 20B075S-T	5	3/4" sweat	UP 15-10 B7/TLC	6 3/8	3/4" sweat	99452455	-	-	-	-	-
Astro 20B075S-TA	5	3/4" sweat	-	-	-	-	-	-	-	-	-
Astro 20BF-LC	6 3/8	2-bolt flange	-	-	-	-	-	-	-	-	-
Astro 20BF-T	6 3/8	2-bolt flange	-	-	-	-	-	-	-	-	-
Astro 20BF-TA	6 3/8	2-bolt flange	-	-	-	-	-	-	-	-	-
Astro 20BU	5	1 1/4" union	UP 15-29 SU	5 7/8	1 1/4" union	59896775	-	59896784	-	-	-
Astro 20BU-T	5	1 1/4" union	UP 15-29 SU/TLC	5 7/8	1 1/4" union	99452462	-	-	-	-	-
Astro 20BU-TA	5	1 1/4" union	-	-	-	-	-	-	-	-	-
Astro 225BS	5	1/2" sweat	UPS 15-35 SFC	6 1/2	2-bolt flange*	59896772	-	-	-	-	-
Astro 225BS	5	3/4" sweat	UPS 15-35 SFC	6 1/2	2-bolt flange*	59896772	-	-	-	-	-
Astro 220SSU	6	1 1/4" union	UPS 15-35 SUC	5 7/8	1 1/4" union	59896778	-	-	-	-	-
Astro 225SSU	6	1 1/4" union	UPS 15-35 SUC	5 7/8	1 1/4" union	59896778	-	-	-	-	-
Astro 230SSU	6 3/8	1 1/4" union	UPS 15-55 SUC	6 1/2	2-bolt flange	-	-	59896786	-		
Astro 250SSU	6 3/8	1 1/4" union	-	-	-	-	-	-	-	-	-
Astro 25B050S	5	1/2" sweat	UP 15-18 B5	5	1/2" sweat	59896114	-	59896118	-	-	-
Astro 25B050S-LC	5	1/2" sweat	UP 15-18 B5/LC	5	1/2" sweat	59896211	-	-	-	-	-
Astro 25B050S-T	5	1/2" sweat	UP 15-18 B5/TLC	5	1/2" sweat	99452460	-	-	-	-	-
Astro 25B050S-TA	5	1/2" sweat	-	-	-	-	-	-	-	-	-
Astro 25B075S	5	3/4" sweat	UP 15-18 B7	6 3/8	3/4" sweat	59896121	-	59896119	-	-	-
Astro 25B075S-LC	5	3/4" sweat	UP 15-18 B7/LC	6 3/8	3/4" sweat	59896229	-	-	-	-	-
Astro 25B075S-T	5	3/4" sweat	UP 15-18 B7/TLC	6 3/8	3/4" sweat	99452461	-	-	-	-	-
Astro 25B075S-TA	5	3/4" sweat	-	-	-	-	-	-	-	-	-
Astro 25BU	6	1 1/4" union	UPS 15-29 SU	5 7/8	1 1/4" union	59896775	-	59896784	-	-	-
Astro 25BU-LC	6	1 1/4" union	UPS 15-29 SU/LC	5 7/8	1 1/4" union	59896776	-	-	-	-	-
Astro 25BU-T	6	1 1/4" union	UPS 15-29 SUC/TLC	5 7/8	1 1/4" union	99452462	-	-	-	-	-
Astro 25BU-TA	6	1 1/4" union	-	-	-	-	-	-	-	-	-
Astro 30B	6 3/8	2-bolt flange-R	UPS 15-55 SFC	6 1/2	2-bolt flange*	59896773	-	-	-	-	-
Astro 30B-LC	6 3/8	2-bolt flange-R	ALPHA2 15-55 SFC, ALPHA1 15-55 SFC	6 1/2	2-bolt flange*	99163937, 99163972, 99287250, 99287262	-	-	-	-	-
Astro 30B-T	6 3/8	2-bolt flange-R	-	-	-	-	-	-	-	-	-
Astro 30B-TA	6 3/8	2-bolt flange-R	-	-	-	-	-	-	-	-	-
Astro 30B-3	6 3/8	2-bolt flange-R	UPS 15-55 SFC	6 1/2	2-bolt flange*	59896773	-	-	-	-	-
			ALPHA2 15-55 SFC, ALPHA1 15-55 SFC	6 1/2	2-bolt flange*	99163937, 99163972, 99287250, 99287262	-	-	-	-	-

* May not match specific competitive flange orientation.

Grundfos provides no guarantee as to the accuracy of competitor information listed herein.

Competitor cross-reference for Armstrong
Open systems: Stainless steel and lead-free bronze pump housings

Armstrong model	Port-to-port length [in]	Flange size/ connection type	Grundfos model	Port-to-port length [in]	Flange size/ connection type	Grundfos product number					
						1 x 115 V	1 x 208 V	1 x 230 V	3 x 208 V	3 x 230 V	3 x 460 V
Astro 50B	6 3/8	2-bolt flange-R	UPS 26-99 SFC	6 1/2	2-bolt flange*	98961763	-	98961765	-		
			Magna 32-100 FN	6 1/2	2-bolt flange	-	98052760	98052760	98052760	98052760	-
Astro 50B-LC	6 3/8	2-bolt flange-R	-	-	-	-	-	-	-	-	-
Astro 50B-T	6 3/8	2-bolt flange-R	-	-	-	-	-	-	-	-	-
Astro 50B-TA	6 3/8	2-bolt flange-R	-	-	-	-	-	-	-	-	-
Astro 50B-3	6 3/8	2-bolt flange-R	UPS 26-99 SFC	6 1/2	2-bolt flange*	98961763	-	98961765	-	-	-
			Magna 32-100 FN	6 1/2	2-bolt flange	-	98052760	98052760	98052760	98052760	-
Astro 70B	6 3/8	2-bolt flange	-	-	-	-	-	-	-	-	-
Astro 70B-LC	6 3/8	2-bolt flange	-	-	-	-	-	-	-	-	-
Astro 70B-T	6 3/8	2-bolt flange	-	-	-	-	-	-	-	-	-
Astro 70B-TA	6 3/8	2-bolt flange	-	-	-	-	-	-	-	-	-
S25B	6 1/2	Flange	UPS 43-44 BFC	8 1/2	2-bolt flange	52722520	-	52722521	-	-	-
			Magna 32-100 FN	6 1/2	2-bolt flange	-	98052760	98052760	98052760	98052760	-
S35B	8 1/2	2" NPT	UPS 43-44 BFC	8 1/2	2-bolt flange*	52722520	-	52722521	-	-	-
H32B	8 1/2	Flange	UPS 43-44 BFC	8 1/2	2-bolt flange	52722520	-	52722521	-	-	-
			Magna 32-100 FN	6 1/2	2-bolt flange	-	98052760	98052760	98052760	98052760	-

* May not match specific competitive flange orientation.

Grundfos provides no guarantee as to the accuracy of competitor information listed herein.

Closed systems: Cast iron pump housings

Competitor cross-reference for Armstrong
Closed systems: Cast iron pump housings

Armstrong model	Port-to-port length [in]	Flange size/ connection type	Grundfos model	Port-to-port length [in]	Flange size/ connection type	Grundfos product number					
						1 x 115 V	1 x 208 V	1 x 230 V	3 x 208 V	3 x 230 V	3 x 460 V
Astro 230CI	6 3/8	2-bolt flange	UPS 15-58 FC	6 1/2	2-bolt flange	59896341	-	-	-	-	-
			ALPHA2 15-55 FC, ALPHA1 15-55 FC	6 1/2	2-bolt flange	99163903, 99163906, 99285998, 99287256	-	-	-	-	-
Astro 230CI-R	6 3/8	2-bolt flange-R	UPS 15-58 FRC	6 1/2	2-bolt flange	59896343	-	-	-	-	-
			ALPHA2 15-55 FRC, ALPHA1 15-55 FRC	6 1/2	2-bolt flange	99163932, 99163934, 99287244, 99287259	-	-	-	-	-
Astro 250CI	6 3/8	2-bolt flange	UPS 26-99 FC	6 1/2	2-bolt flange	52722512	-	52722513			
			Magna 32-100 F	6 1/2	2-bolt flange	-	98071396	98071396	98071396	98071396	-
Astro 250CI-R	6 3/8	2-bolt flange-R	-	-	-	-	-	-	-	-	-
Astro 20F	6 3/8	2-bolt flange-R	-	-	-	-	-	-	-	-	-
Astro 30	6 3/8	2-bolt flange-R	UPS 15-58 FRC	6 1/2	2-bolt flange-R	59896343	-	-	-	-	-
			ALPHA2 15-55 FRC, ALPHA1 15-55 FRC	6 1/2	2-bolt flange	99163932, 99163934, 99287244, 99287259	-	-	-	-	-
			UP 15-42 FR	6 1/2	2-bolt flange-R	59896167	-	59896274			
Astro 30-3	6 3/8	2-bolt flange	UPS 15-58 FC	6 1/2	2-bolt flange	59896341	-	-	-	-	-
			ALPHA2 15-55 FC, ALPHA1 15-55 FC	6 1/2	2-bolt flange	99163903, 99163906, 99285998, 99287256	-	-	-	-	-
Astro 50	6 3/8	2-bolt flange-R	UPS 26-99 FC	6 1/2	2-bolt flange*	52722512	-	52722513	-	-	-
Astro 50-3	6 3/8	2-bolt flange	UPS 26-99 FC	6 1/2	2-bolt flange	52722512	-	52722513	-	-	-
Astro 70	6 3/8	2-bolt flange	-	-	-	-	-	-	-	-	-
S25	6 1/2	Flange	UPS 26-99 FC	6 1/2	2-bolt flange	52722512	-	52722513	-	-	-
			Magna 32-100 F	6 1/2	2-bolt flange	-	98071396	98071396	98071396	98071396	-
H32	8 9/16	2-bolt flange-R	UPS 43-44 FC	8 1/2	2-bolt flange*	52722514	-	52722515	-	-	-
			Magna 32-100 F	6 1/2	2-bolt flange	-	98071396	98071396	98071396	98071396	-
S35	8 1/2	2" flange-R	UPS 50-44 F	8 1/2	2" 4-bolt flange	-	-	-	-	-	-

* May not match specific competitive flange orientation.

Grundfos provides no guarantee as to the accuracy of competitor information listed herein.

Reference for replacing Wilo models

Open systems: Stainless steel and lead-free bronze pump housings

Competitor cross-reference for Wilo
Open systems: Stainless steel and lead-free bronze pump housings

Wilo model	Port-to-port length [in]	Flange size/ connection type	Grundfos model	Port-to-port length [in]	Flange size/ connection type	Grundfos product number					
						1 x 115 V	1 x 208 V	1 x 230 V	3 x 208 V	3 x 230 V	3 x 460 V
Star Z-15 BN5	3 1/8	1/2" union NPT	UP 10-16 A PM BN5/ LC	3 1/8	1/2" FNPT		98420223		-	-	-
Star Z-15 BS5	3 1/8	1/2" sweat	UP 10-16 A PM B5/LC	3 1/8	1/2" sweat		98420222		-	-	-
							-	-	-	-	-
Star 3 BS 5	5	1/2" sweat	UP 15-10 B5	5	1/2" sweat	59896213	-	-	-	-	-
Star 3 BS 7	5	3/4" sweat	UP 15-10 B7	6 3/8	3/4" sweat	59896226	-	-	-	-	-
Star 5 B	6 3/8	2-bolt flange	-	-	-	-	-	-	-	-	-
Star 5 BU	6	3/4" union	-	-	-	-	-	-	-	-	-
		1" union	-	-	-	-	-	-	-	-	-
Star 5 BFX	6 3/8	2-bolt flange-R	-	-	-	-	-	-	-	-	-
Star 8 BS 5	5	1/2" sweat	UP 15-18 B5	5	1/2" sweat	59896114	-	59896118	-	-	-
Star 8 BS 7	5	3/4" sweat	UP 15-18 B7	5	3/4" sweat	59896121	-	59896119	-	-	-
Star 11 BF	6 3/8	2-bolt flange	UP 15-29 SF	6 1/2	2-bolt flange	59896771	-	-	-	-	-
Star 11 BU	6	3/4" union	UP 15-29 SU	6 1/2	Union*	59896775	-	59896784	-	-	-
		1" union	UP 15-29 SU	6 1/2	Union*	59896775	-	59896784	-	-	-
Star 16 SF	6 3/8	2-bolt flange	UPS 15-55 SFC	6 1/2	2-bolt flange	59896773	-	-	-	-	-
			ALPHA2 15-55 SFC, ALPHA1 15-55 SFC	6 1/2	2-bolt flange*	99163937, 99163972, 99287250, 99287262	-	-	-	-	-
Star 16 BFX	6 3/8	2-bolt flange-R	UPS 15-55 SFC	6 1/2	2-bolt flange*	59896773	-	-	-	-	-
			ALPHA2 15-55 SFC, ALPHA1 15-55 SFC	6 1/2	2-bolt flange*	99163937, 99163972, 99287250, 99287262	-	-	-	-	-
Star S 16 BFX	6 3/8	2-bolt flange-R	UPS 15-55 SFC	6 1/2	2-bolt flange*	59896773	-	-	-	-	-
			ALPHA2 15-55 SFC, ALPHA1 15-55 SFC	6 1/2	2-bolt flange*	99163937, 99163972, 99287250, 99287262	-	-	-	-	-
Star 21 BF	6 3/8	2-bolt flange	UPS 15-55 SFC	6 1/2	2-bolt flange	59896773	-	-	-	-	-
			ALPHA2 15-55 SFC, ALPHA1 15-55 SFC	6 1/2	2-bolt flange*	99163937, 99163972, 99287250, 99287262	-	-	-	-	-
Star 21 BFX	6 3/8	2-bolt flange-R	UPS 15-55 SFC	6 1/2	2-bolt flange*	59896773	-	-	-	-	-
			ALPHA2 15-55 SFC, ALPHA1 15-55 SFC	6 1/2	2-bolt flange*	99163937, 99163972, 99287250, 99287262	-	-	-	-	-
Star 21 SF	6 3/8	2-bolt flange	UPS 15-55 SFC	6 1/2	2-bolt flange	59896773	-	-	-	-	-
			ALPHA2 15-55 SFC, ALPHA1 15-55 SFC	6 1/2	2-bolt flange*	99163937, 99163972, 99287250, 99287262	-	-	-	-	-
Star S 21 BFX	6 3/8	2-bolt flange-R	UPS 15-55 SFC	6 1/2	2-bolt flange*	59896773	-	-	-	-	-
			ALPHA2 15-55 SFC, ALPHA1 15-55 SFC	6 1/2	2-bolt flange*	99163937, 99163972, 99287250, 99287262	-	-	-	-	-
Star 30 BU	6	3/4" union	UPS 26-96 SF	6 1/2	2-bolt flange*	98961756	-	98961739	-	-	-
		3/4" union	Magna 32-100 FN	6 1/2	2-bolt flange*	-	98052760	98052760	98052760	98052760	-
		1" union	UPS 26-96 SF	6 1/2	2-bolt flange*	98961756	-	98961739			
		1" union	Magna 32-100 FN	6 1/2	2-bolt flange*	-	98052760	98052760	98052760	98052760	-
Star 32 BF	6 3/8	2-bolt flange	-	-	-	-	-	-	-	-	-

* May not match specific competitive flange orientation.

Grundfos provides no guarantee as to the accuracy of competitor information listed herein.

Competitor cross-reference for Wilo
Open systems: Stainless steel and lead-free bronze pump housings

Wilo model	Port-to-port length [in]	Flange size/ connection type	Grundfos model	Port-to-port length [in]	Flange size/ connection type	Grundfos product number					
						1 x 115 V	1 x 208 V	1 x 230 V	3 x 208 V	3 x 230 V	3 x 460 V
Stratos ECO 16BFX	6 1/2	2-bolt flange-R	ALPHA2 15-55 SFC, ALPHA1 15-55 SFC	6 1/2	2-bolt flange*	99163937, 99163972, 99287250, 99287262	-	-	-	-	-

* May not match specific competitive flange orientation.

Grundfos provides no guarantee as to the accuracy of competitor information listed herein.

Closed systems: Cast iron pump housings

Competitor cross-reference for Wilo
Closed systems: Cast iron pump housings

Wilo model	Port-to-port length [in]	Flange size/ connection type	Grundfos model	Port-to-port length [in	Flange size/ connection type	Grundfos product number					
						1 x 115 V	1 x 208 V	1 x 230 V	3 x 208 V	3 x 230 V	3 x 460 V
Star 5 FX	6 3/8	2-bolt flange-R	UP 15-10 FR	6 1/2	2-bolt flange-R	59896249	-	-	-	-	-
Star 16 F	6 3/8	2-bolt flange	UP 15-10 F	6 1/2	2-bolt flange	59896248	-	-	-	-	-
Star 16 FX	6 3/8	2-bolt flange-R	UPS 15-58 FRC	6 1/2	2-bolt flange-R	59896343	-	-	-	-	-
			ALPHA2 15-55 FRC, ALPHA1 15-55 FRC	6 1/2	2-bolt flange-R	99163932, 99163934, 99287244, 99287259	-	-	-	-	
Star S 16 F	6 3/8	2-bolt flange	UPS 15-58 FC	6 1/2	2-bolt flange	59896341	-	-	-	-	-
			ALPHA2 15-55 FC, ALPHA1 15-55 FC	6 1/2	2-bolt flange	99163903, 99163906, 99285998, 99287256	-	-	-	-	-
Star S 16 FX	6 3/8	2-bolt flange-R	UPS 15-58 FRC	6 1/2	2-bolt flange-R	59896343	-	-	-	-	-
			ALPHA2 15-55 FRC, ALPHA1 15-55 FRC	6 1/2	2-bolt flange-R	99163932, 99163934, 99287244, 99287259	-	-	-	-	-
Star 17 FX	8 1/2	2-bolt flange-R	UPS 43-44 FC	8 1/2	2-bolt flange*	52722514	-	52722515	-	-	-
Star 21 F	6 3/8	2-bolt flange	ALPHA2 15-55 FC, ALPHA1 15-55 FC	6 1/2	2-bolt flange	99163903, 99163906, 99285998, 99287256	-	-	-	-	-
Star 21 FX	6 3/8	2-bolt flange-R	ALPHA2 15-55 FRC, ALPHA1 15-55 FRC	6 1/2	2-bolt flange-R	99163932, 99163934, 99287244, 99287259	-	-	-	-	-
Star S 21 F	6 3/8	2-bolt flange	ALPHA2 15-55 FC, ALPHA1 15-55 FC	6 1/2	2-bolt flange	99163903, 99163906, 99285998, 99287256	-	-	-	-	-
Star S 21 FX	6 3/8	2-bolt flange-R	ALPHA2 15-55 FRC, ALPHA1 15-55 FRC	6 1/2	2-bolt flange-R	99163932, 99163934, 99287244, 99287259	-	-	-	-	-
Star 30 F	6 1/2	2-bolt flange	UPS 26-99 FC	6 1/2	2-bolt flange	52722512	-	52722513	-	-	-
			Magna 32-100 FN	6 1/2	2-bolt flange*	-	98052760	98052760	98052760	98052760	-
Star 32 F	6 3/8	2-bolt flange	UP 15-100 F	6 1/2	2-bolt flange	59896300	-	-	-	-	-
Stratos ECO 16F	6 1/2	2-bolt flange	ALPHA2 15-55 FC, ALPHA1 15-55 FC	6 1/2	2-bolt flange	99163903, 99163906, 99285998, 99287256	-	-	-	-	-
Stratos ECO 16FX	6 1/2	2-bolt flange-R	ALPHA2 15-55 FRC, ALPHA1 15-55 FRC	6 1/2	2-bolt flange-R	99163932, 99163934, 99287244, 99287259	-	-	-	-	-

* May not match specific competitive flange orientation.

Grundfos provides no guarantee as to the accuracy of competitor information listed herein.

Discontinued products

These tables show the new products or part numbers which replace discontinued products or part numbers.

Product number update for UP with new digital timer and line cord

Model	Old product number	New product number
UP15-10B5/TLC	59896215	99452454
UP15-10B7/TLC	59896210	99452455
UP15-10BUC5/TLC	59896238	99452457
UP15-10BUC7/TLC	59896240	99452458
UP15-18B5/TLC	59896212	99452460
UP15-18B7/TLC	59896230	99452461
UP15-29SUC/TLC	59896777	99452462
UP15-42B5/TLC	59896234	99452473
UP15-42B7/TLC	59896236	99452477
UPS15-35SUC/TLC	59896780	99452478
UPS15-55SUC/TLC	59896783	99452479

UP(S)

Stainless steel, flanged 115 V			
Old model	**Old model product number**	**New model**	**New model product number**
UP 15-18 SF	59896125	UP 15-29 SF	59896771
UP 15-42 SF	59896171	UPS 15-35 SFC	59896772
UPS 15-42 SF	59896247	UPS 15-55 SFC	59896773
UP 25-64 SF	52722322		
Stainless steel, union 115 V			
UP 15-18 SU	59896127	UP 15-29 SU	59896775
UP 15-18 SU/LC	59896231	UP 15-29 SU/LC	59896776
UP 15-18 SU/TLC	59896232	UP 15-29 SU/TLC	99452462
UP 15-42 SU	59896174	UPS 15-35 SUC	59896778
		UPS 15-35 SUC/LC	59896779
		UPS 15-35 SUC/TLC	99452478
UPS 15-42 SU, UP 25-64 SU	59896130, 52722322	UPS 15-55 SUC	59896781
		UPS 15-55 SUC/LC	59896782
		UPS 15-55 SUC/TLC	99452479
Stainless steel, union 230 V			
UP 15-18 SU	59896130	UP 15-29 SU	59896784
UP 15-42 SU	59896172	UP 15-35 SUC	59896785
UP 25-64 SU	52722323	UP 15-55 SUC	59896786
UPS 26-96 BF	52722334	UPS 26-96 SF	98961739
	52722336		98961756
UPS 26-99 BF	52722346	UPS 26-99 SFC	98961760
	52722347		98961762
	52722518		98961763
	52722519		98961765
UPS 26-116 BF	52722393	UPS 26-116 SF	98961766

ALPHA

Cast iron, flanged 115 V			
Old model	**Product number**	**New model**	**Product number**
ALPHA 15-55F	59896877	ALPHA2 15-55F	99163903
ALPHA 15-55F/LC (line cord)	59896832	ALPHA2 15-55F/LC	99163906
ALPHA 15-55FR	59896878	ALPHA2 15-55FR	99163932
ALPHA 15-55FR/LC (line cord)	59896833	ALPHA2 15-55FR/LC	99163934
Stainless steel, flanged 115 V			
ALPHA 15-55SF	59896879	ALPHA2 15-55SF	99163937
ALPHA 15-55SF/LC (line cord)	59896834	ALPHA2 15-55SF/LC (line cord)	99163972

2. Performance ranges

ALPHA2

Performance and operating mode selection

The hydraulic performance shown is without check valve.

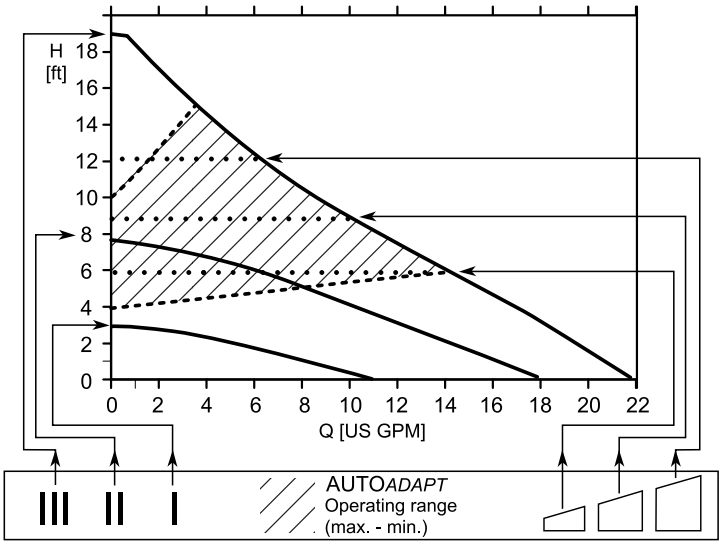

TM04 6025 0611

Pos.	Description
	• Push-button for selection of pump setting • Every time the push-button is pressed, the circulator pump setting is changed.
III	**High, fixed speed** • Runs at a constant speed and consequently on a constant curve. In Speed III, the pump is set on the maximum curve under all operating conditions. Quick venting of the pump can be obtained by setting the pump to Speed III for a short period.
II	**Medium, fixed speed** • Runs at a constant speed and consequently on a constant curve. In Speed II, the pump is set on the medium curve under all operating conditions.
I	**Low, fixed speed** • Runs at a constant speed and consequently on a constant curve. In Speed I, the pump is set on the minimum curve under all operating conditions.

Pos.	Description
	Constant pressure I • The duty point of the pump will move left and right along the lowest constant-pressure curve depending on the water demand in the system. The pump head (pressure) is kept constant, irrespective of the water demand.
	Constant pressure II • The duty point of the pump will move left and right along the middle constant-pressure curve depending on the water demand in the system. The pump head (pressure) is kept constant, irrespective of the water demand.
	Constant pressure III • The duty point of the pump will move left and right along the highest constant-pressure curve depending on the water demand in the system. The pump head (pressure) is kept constant, irrespective of the water demand.
AUTO ADAPT	**AUTO$_{ADAPT}$™ (factory setting)** • This function controls the pump performance automatically within the defined performance range, automatically adjusting the pump performance to system demands over time.

ALPHA1

Performance and operating mode selection

The hydraulic performance shown is without check valve.

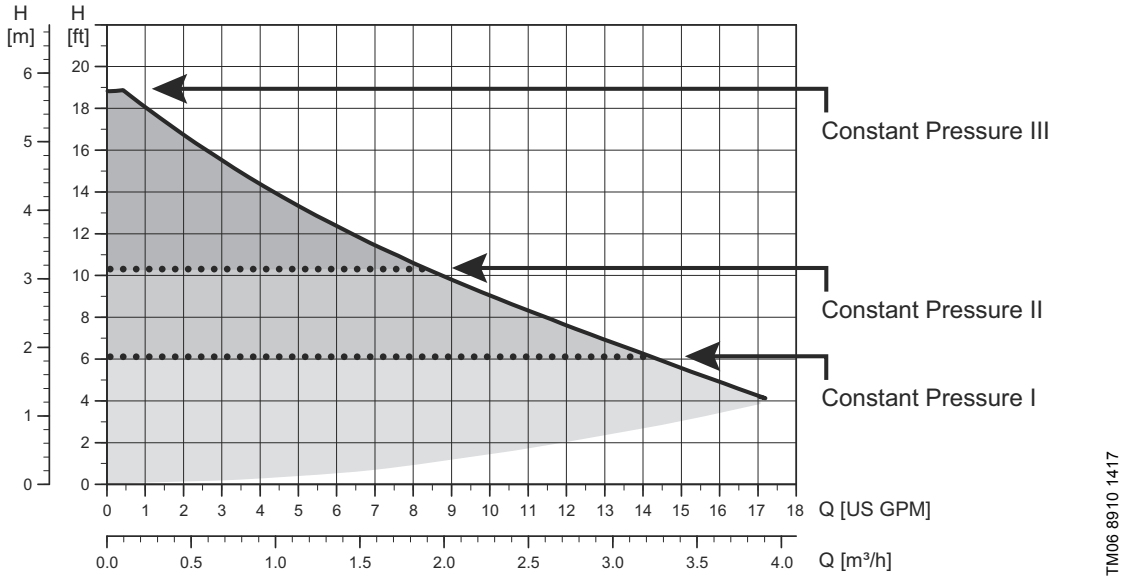

Pos.	Description
	• Push-button for selection of pump setting. • Every time the push-button is pressed, the circulator pump setting is changed.
III	**Constant pressure III** • The duty point of the pump will move left and right along the highest constant-pressure curve depending on the water demand in the system.
II	**Constant pressure II** • The duty point of the pump will move left and right along the middle constant-pressure curve depending on the water demand in the system.
I	**Constant pressure I** • The duty point of the pump will move left and right along the lowest constant-pressure curve depending on the water demand in the system.

UPS, 3-speed

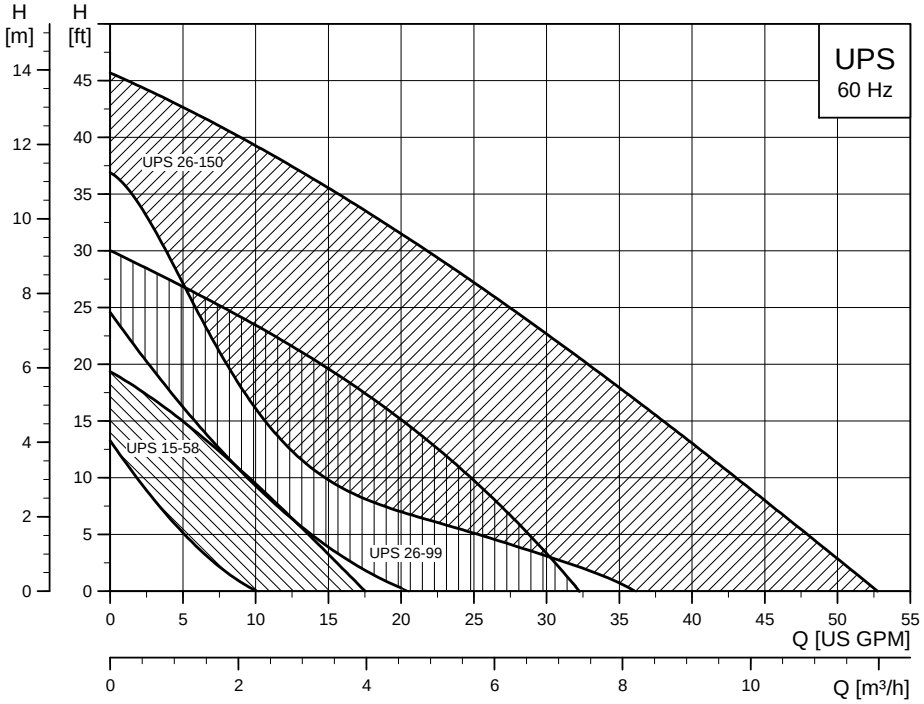

TM04 5461 3209

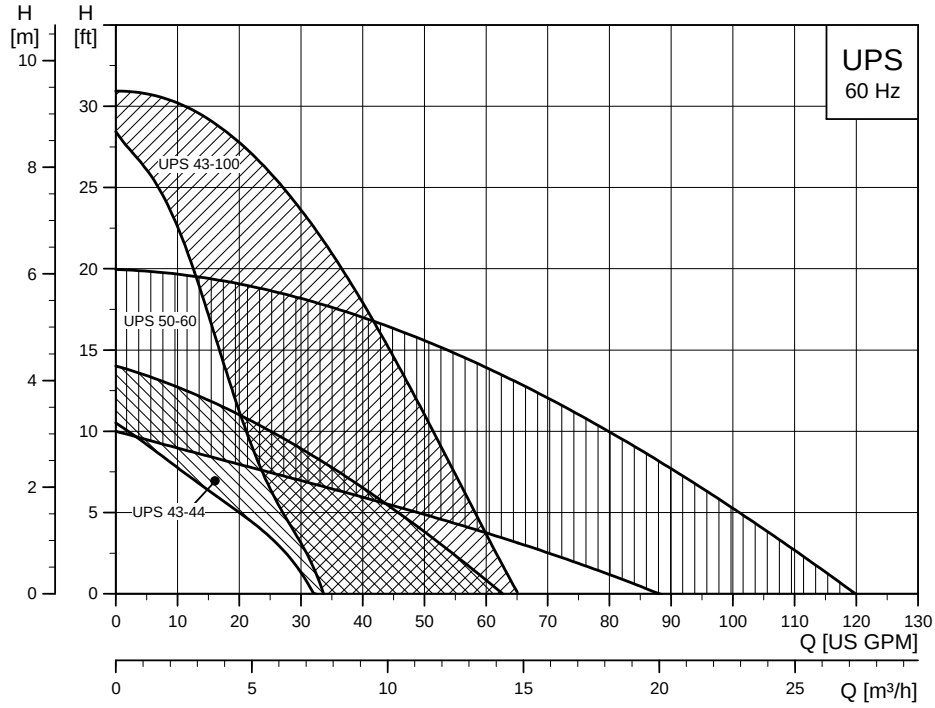

TM04 5460 3209

UPS, cross-reference 3-speed, stainless steel

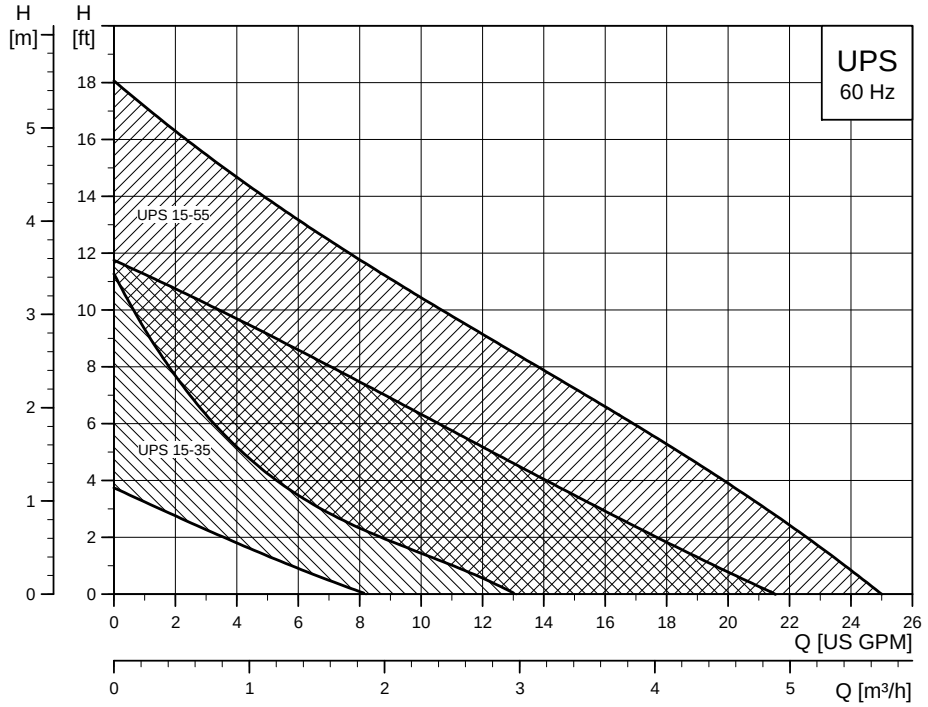

TM04 5462 3209

UP 10-16 A/PM B5/BN5/BU

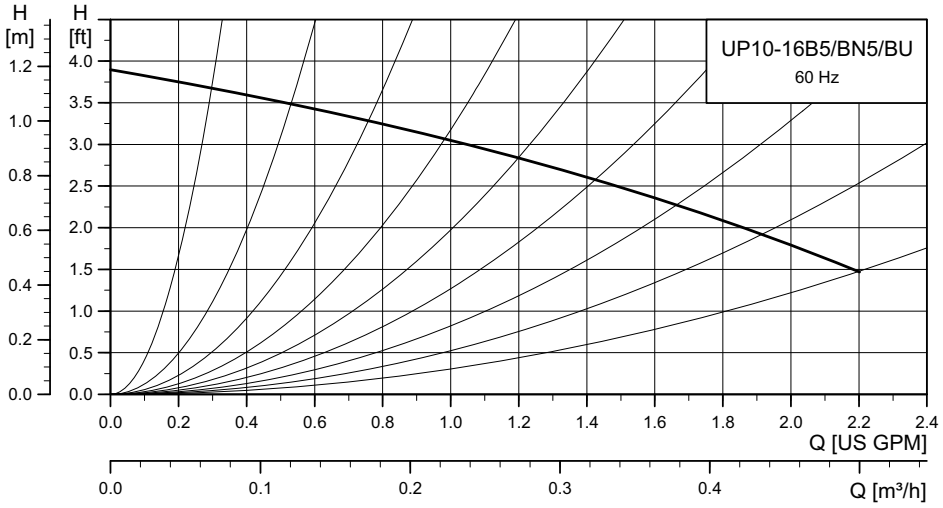

TM06 0178 4913

UP, closed systems

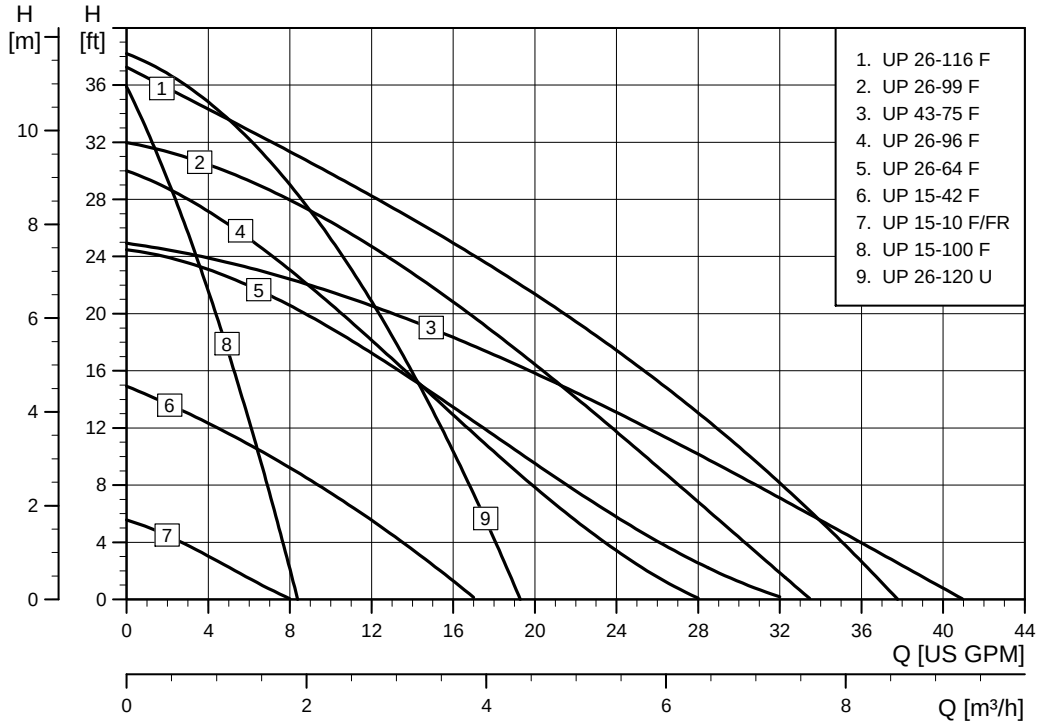

TM03 9128 3507

UP/UPS, open systems

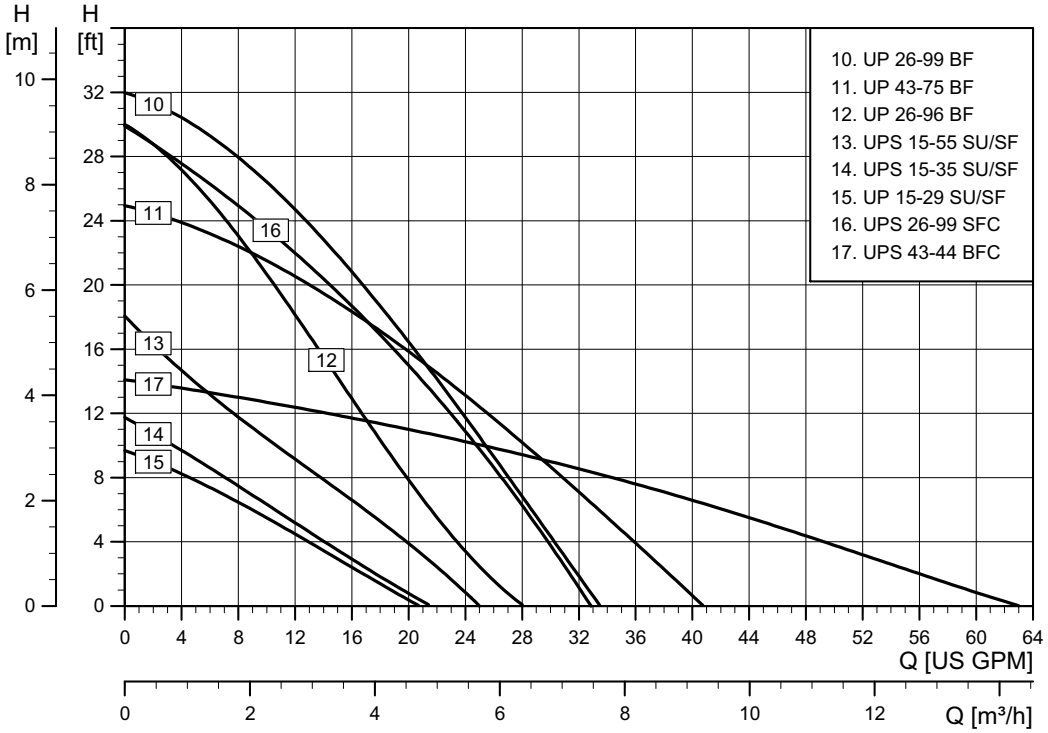

TM03 9129 4516

UP, open systems, 1/2"

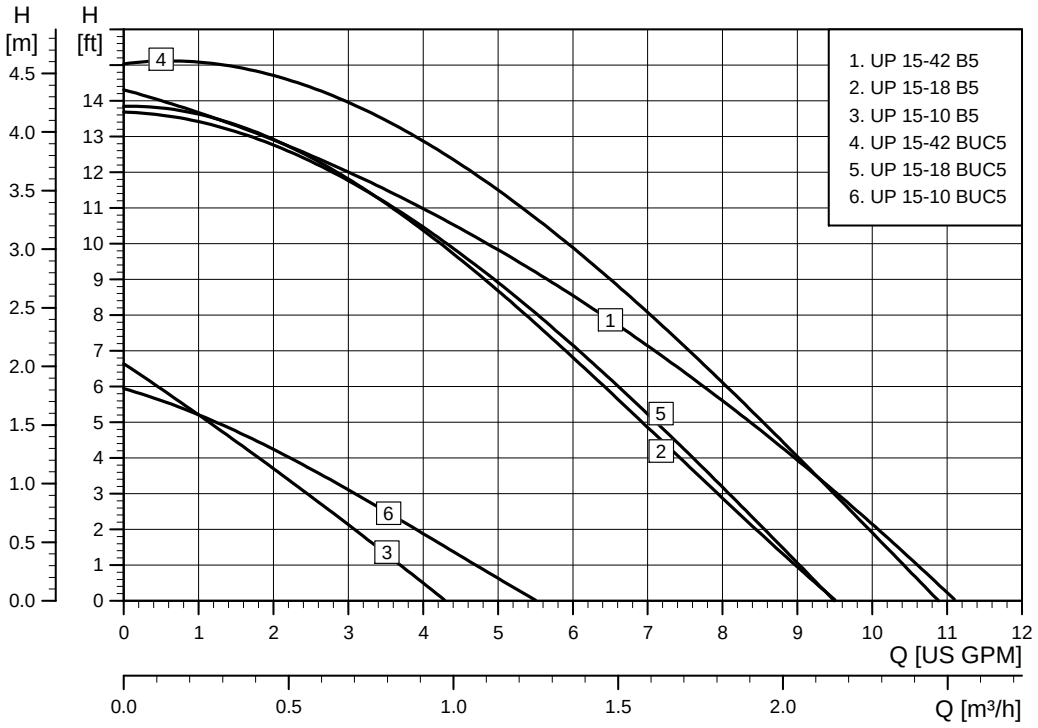

TM03 9131 3507

UP, open systems, 3/4"

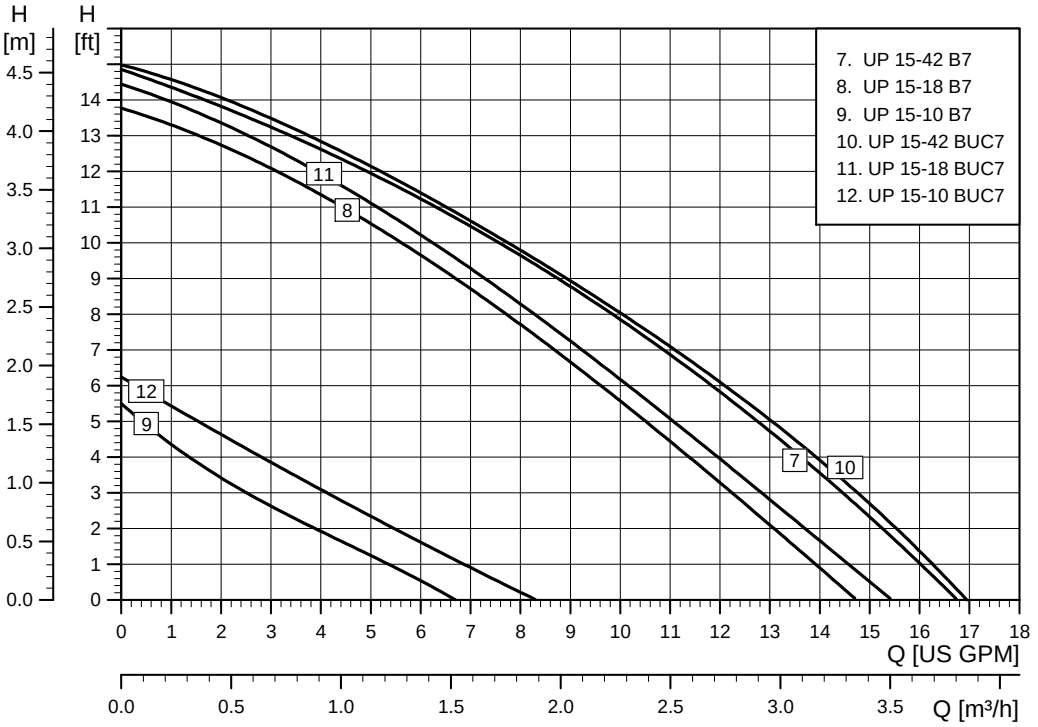

TM03 9132 3507

3. Product range

Cast iron

Closed systems	Product number		Flow rate		Head		Flanged	Union	Check valve	Line cord	Auto	Page
	115 V	230 V	[gpm]	[m^3/h]	[ft]	[m]						
ALPHA2 15-55 FC**	99163903	-	0 - 21.5	0 - 4.9	0 - 19	0 - 5.8	●		●		●	65
ALPHA2 15-55 F/LC**	99163906	-	0 - 21.5	0 - 4.9	0 - 19	0 - 5.8	●		●	●	●	65
ALPHA2 15-55 FRC**	99163932	-	0 - 21.5	0 - 4.9	0 - 19	0 - 5.8	●		●		●	65
ALPHA2 15-55 FR/LC**	99163934	-	0 - 21.5	0 - 4.9	0 - 19	0 - 5.8	●		●	●	●	65
ALPHA1 15-55 FC***	99287256	-	0 - 17	0 - 3.9	0 - 19	0 - 5.8	●		●			67
ALPHA1 15-55 F/LC***	99285998	-	0 - 17	0 - 3.9	0 - 19	0 - 5.8	●		●	●		67
ALPHA1 15-55 FRC***	99287259	-	0 - 17	0 - 3.9	0 - 19	0 - 5.8	●		●			67
ALPHA1 15-55 FR/LC***	99287244	-	0 - 17	0 - 3.9	0 - 19	0 - 5.8	●		●	●		67
UP 15-10 F	59896248	-	0 - 8	0 - 1.8	0 - 5	0 - 1.5	●					49
UP 15-10 FR	59896249	-	0 - 8	0 - 1.8	0 - 5	0 - 1.5	●					49
UP 15-42 FC/MR*	59896804	-	0 - 16	0 - 3.6	0 - 14	0 - 4.3	●		●			61
UP 15-42 F	59896155	59896173	0 - 17	0 - 3.9	0 - 15	0 - 4.6	●					59
UP 15-42 FR	59896167	59896274	0 - 17	0 - 3.9	0 - 15	0 - 4.6	●					59
UP 15-42 F/VS*	59896807	-	0 - 16	0 - 3.6	0 - 15	0 - 4.6	●					62
UPS 15-42 F	-	59896180	0 - 17	0 - 3.9	0 - 16	0 - 4.9	●					60
UPS 15-58 FC	59896341	-	0 - 17	0 - 3.9	0 - 19	0 - 5.8	●		●			69
UPS 15-58 FRC	59896343	-	0 - 17	0 - 3.9	0 - 19	0 - 5.8	●		●			69
UP 15-100 F	59896300	-	0 - 8.5	0 - 1.9	0 - 33	0 - 10.1	●					70
UP 26-64 F	52722330	52722327	0 - 32	0 - 7.3	0 - 24	0 - 7.3	●					71
UP 26-64 F/VS*	52722553	-	0 - 34	0 - 7.7	0 - 24	0 - 7.3	●					72
UP 26-96 F	52722341	52722338	0 - 27	0 - 6.1	0 - 30	0 - 9.1	●					73
UP 26-96 F/VS*	52722552	-	0 - 32	0 - 7.3	0 - 30	0 - 9.1	●					74
UP 26-99 F	52722355	52722351	0 - 34	0 - 7.7	0 - 32	0 - 9.8	●					75
UPS 26-99 FC	52722512	52722513	0 - 33	0 - 7.5	0 - 29	0 - 8.8	●		●			76
UP 26-116 F	-	52722377	0 - 38	0 - 8.6	0 - 37	0 - 11.3	●					77
UP 26-120 U	52722435	52722436	0 - 19	0 - 4.3	0 - 38	0 - 11.6		●				78
UPS 26-150 F	95906630	95906631	0 - 51	0 - 11.6	0 - 45	0 - 13.7	●					79
UP 43-44 F	52722437	52722438	0 - 64	0 - 14.5	0 - 13	0 - 4.0	●					80
UPS 43-44 FC	52722514	52722515	0 - 41	0 - 9.3	0 - 25	0 - 7.6	●		●			81
UP 43-70 F	96439644	-	15 - 85	3.4 - 19.3	1 - 24	0.3 - 7.3	●					82
UP 43-75 F	52722373	52722372	0 - 40	0 - 9.1	0 - 26	0 - 7.9	●					83
UPS 43-100 F	95906636	95906637	0 - 65	0 - 14.8	0 - 31	0 - 9.4	●					84
UP 43-110 F	96439643	-	0 - 90	0 - 20.4	1 - 37	0.3 - 11.3	●					85
UPS 50-44 F	52722557	52722558	0 - 65	0 - 14.8	0 - 14	0 - 4.3	●					86
UPS 50-60 F	97523134	97523135	0 - 125	0 - 28.4	0 - 21	0 - 6.4	●					87
UP 50-75 F	52722352	52722353	0 - 40	0 - 9.1	0 - 25	0 - 7.62	●					88

* VS - variable speed, MR - MixiMizer™
** ALPHA2 is a variable-speed model with AUTO$_{ADAPT}$™.
*** ALPHA1 is a model with three constant-pressure settings.

Bronze

Open systems	Product number		Flow rate		Head		Flanged	Union	NPT	Sweat	Check valve	Timer	Line cord	Auto	Page
	115 V	230 V	[gpm]	[m³/h]	[ft]	[m]									
UP 10-16 PM B5/LC	98420206	-	0 - 2.2	0 - 0.5	0 - 3.9	0 - 1.2				●					45
UP 10-16 A PM B5/LC	98420222	-	0 - 2.2	0 - 0.5	0 - 3.9	0 - 1.2				●		●	●	●	45
UP 10-16 PM BN5/LC	98420210	-	0 - 2.2	0 - 0.5	0 - 3.9	0 - 1.2			●				●		45
UP 10-16 A PM BN5/LC	98420223	-	0 - 2.2	0 - 0.5	0 - 3.9	0 - 1.2			●			●	●	●	45
UP 10-16 A PM BU/LC	98420224	-	0 - 2.2	0 - 0.5	0 - 3.9	0 - 1.2		●			●	●	●	●	45
UP 15-10 B5	59896213	-	0 - 9	0 - 2.0	0-6	0 - 1.8				●					47
UP 15-10 B5/LC	59896214	-	0 - 9	0 - 2.0	0-6	0 - 1.8				●			●		47
UP 15-10 B5/TLC	99452454	-	0 - 9	0 - 2.0	0-6	0 - 1.8				●		●	●		47
UP 15-10 B7	59896226	-	0 - 9	0 - 2.0	0-6	0 - 1.8				●					47
UP 15-10 B7/LC	59896209	-	0 - 9	0 - 2.0	0-6	0 - 1.8				●			●		47
UP 15-10 B7/TLC	99452455	-	0 - 9	0 - 2.0	0-6	0 - 1.8				●		●	●		47
UP 15-10 BUC5	59896225	-	0 - 9	0 - 2.0	0-6	0 - 1.8		●			●				48
UP 15-10 BUC5/LC	59896237	-	0 - 9	0 - 2.0	0-6	0 - 1.8		●			●		●		48
UP 15-10 BUC5/TLC	99452457	-	0 - 9	0 - 2.0	0-6	0 - 1.8		●			●	●	●		48
UP 15-10 BUC7	59896241	-	0 - 9	0 - 2.0	0-6	0 - 1.8		●			●				48
UP 15-10 BUC7/LC	59896239	-	0 - 9	0 - 2.0	0-6	0 - 1.8		●			●		●		48
UP 15-10 BUC7/TLC	99452458	-	0 - 9	0 - 2.0	0-6	0 - 1.8		●			●	●	●		48
UP 15-18 B5	59896114	59896118	0 - 15	0 - 3.4	0-14	0 - 4.3				●					51
UP 15-18 B5/LC	59896211	-	0 - 15	0 - 3.4	0-14	0 - 4.3				●			●		51
UP 15-18 B5/TLC	99452460	-	0 - 15	0 - 3.4	0-14	0 - 4.3				●		●	●		51
UP 15-18 B7	59896121	59896119	0 - 15	0 - 3.4	0-14	0 - 4.3				●					51
UP 15-18 B7/LC	59896229	-	0 - 15	0 - 3.4	0-14	0 - 4.3				●			●		51
UP 15-18 B7/TLC	99452461	-	0 - 15	0 - 3.4	0-14	0 - 4.3				●		●	●		51
UP 15-18 BUC5	59896123	-	0 - 12	0 - 2.7	0-16	0 - 4.9		●			●				52
UP 15-18 BUC7	59896124	-	0 - 12	0 - 2.7	0-16	0 - 4.9		●			●				52
UP 15-42 B5	59896145	59896142	0 - 17	0 - 3.9	0-15	0 - 4.6				●					56
UP 15-42 B5/LC	59896233	-	0 - 17	0 - 3.9	0-15	0 - 4.6				●			●		56
UP 15-42 B5/TLC	99452473	-	0 - 17	0 - 3.9	0-15	0 - 4.6				●		●	●		56
UP 15-42 B7	59896146	59896149	0 - 17	0 - 3.9	0-15	0 - 4.6				●					56
UP 15-42 B7/LC	59896235	-	0 - 17	0 - 3.9	0-15	0 - 4.6				●			●		56
UP 15-42 B7/TLC	99452477	-	0 - 17	0 - 3.9	0-15	0 - 4.6				●		●	●		56
UP 15-42 BUC5	59896150	-	0 - 16	0 - 3.6	0-15	0 - 4.6		●			●				57
UP 15-42 BUC7	59896151	-	0 - 16	0 - 3.6	0-15	0 - 4.6		●			●				57
UP 15-42 BUC5/MR*	59896805	-	0 - 8	0 - 1.8	0-14	0 - 4.3		●			●				57
UP 15-42 BUC7/MR*	59896806	-	0 - 14	0 - 3.2	0-15	0 - 4.6		●			●				57
UP 43-44 BF	52722439	52722440	0 - 64	0 - 14.5	0-13	0 - 4.0	●								80
UPS 43-44 BFC	52722520	52722521	0 - 63	0 - 14.3	0-13	0 - 4.0	●				●				81
UP 43-75 BF	52722370	52722369	0 - 45	0 - 10.2	0-26	0 - 7.9	●								83

* MR - MixiMizer™

Stainless steel

Open systems	Product number		Flow rate		Head		Flanged	Union	NPT	Sweat	Check valve	Timer	Line cord	Auto	Pg
	115 V	230 V	[gpm]	[m³/h]	[ft]	[m]									
UP 15-10 SU7P/DTLC*, UP 15-10 SU7P/TLC*	595916, 99452459	-	0 - 3	0 - 0.7	0 - 3	0 - 0.9		●	●			●	●		50
ALPHA2 15-55 SF**	99163937	-	0 - 21.5	0 - 4.9	0 - 19	0 - 5.8	●				●			●	65
ALPHA2 15-55 SF/LC**	99163972	-	0 - 21.5	0 - 4.9	0 - 19	0 - 5.8	●				●		●	●	65
ALPHA1 15-55 SF***	99287262	-	0 - 17	0 - 3.9	0 - 19	0 - 5.8	●				●				67
ALPHA1 15-55 SF/LC***	99287250	-	0 - 17	0 - 3.9	0 - 19	0 - 5.8	●				●		●		67
UP 15-29 SF	59896771	-	0 -22	0 - 5.0	0 - 10	0 - 3.0	●								53
UP 15-29 SU	59896775	59896784	0 - 22	0 - 5.0	0 - 10	0 - 3.0		●							53
UP 15-29 SU/LC	59896776	-	0 - 22	0 - 5.0	0 - 10	0 - 3.0		●					●		53
UP 15-29 SUC/TLC	99452462	-	0 - 22	0 - 5.0	0 - 10	0 - 3.0		●			●	●	●		53
UP 15-35 SUC	-	59896785	0 - 22	0 - 5.0	0 - 12	0 - 3.7		●			●				54
UPS 15-35 SFC	59896772	-	0 - 22	0 - 5.0	0 - 12	0 - 3.7	●				●				55
UPS 15-35 SUC	59896778	-	0 - 22	0 - 5.0	0 - 12	0 - 3.7		●			●				55
UPS 15-35 SUC/TC	99452478	-	0 - 22	0 - 5.0	0 - 12	0 - 3.7		●			●	●	●		54
UP 15-55 SUC	-	59896786	0 - 25	0 - 5.7	0 - 18	0 - 5.5		●			●				63
UPS 15-55 SFC	59896773	-	0 - 25	0 - 5.7	0 - 18	0 - 5.5	●				●				64
UPS 15-55 SUC	59896781	-	0 - 25	0 - 5.7	0 - 18	0 - 5.5		●			●				63
UPS 15-55 SUC/TLC	99452479	-	0 - 25	0 - 5.7	0 - 18	0 - 5.5		●			●	●	●		64
UP 26-96 SF	98961756	98961739	0 - 27	0 - 6.1	0 - 30	0 - 9.1	●								73
UP 26-99 SF	98961762	98961760	0 - 34	0 - 7.7	0 - 32	0 - 9.8	●								75
UPS 26-99 SFC	98961763	98961765	0 - 33	0 - 7.5	0 - 29	0 - 8.8	●				●				76
UP 26-116 SF		98961766	0 - 38	0 - 8.6	0 - 37	0 - 11.3	●								77
UPS 26-150 SF	95906632	95906633	0 - 51	0 - 11.6	0 - 47	0 - 14.3	●								79
UPS 43-100 SF	95906638	95906639	0 - 68	0 - 15.4	0 - 33	0 - 10.0	●								84
UPS 50-60 SF	97523136	97523137	0 - 125	0 - 28.4	0 - 21	0 - 6.4	●								87

* Comfort System with 3/4" M x FNPT.
** ALPHA2 is a variable-speed model with AUTO$_{ADAPT}$™.
*** ALPHA1 is a model with three constant-pressure settings.

4. Identification

Type key

Example	UP	S	15	-58	()	F	C	/

Circulator pump

S: 3-speed

10: Comfort series
15: Small-stator UP
25, 26, 43, 50: Large-stator UP

Maximum head [dm]

Pump housing
= Cast iron (no letter = cast iron)
S = Stainless steel
B = Bronze

Pipe connection
F = Flange
FR = Flange rotated 90 °
U = Union connection
5 = 1/2" internal sweat
7 = 3/4" internal sweat
N = NPT female thread fitting
7P = 3/4" male x female connection

Special features
A = Thermostat (Aquastat)
C = Check valve (removable)

/T = Timer
/LC = Line cord
/TLC = Timer and line cord
/VS = Variable-speed control
/MR = Mixing-reset control

Faceplate

UP 15-42F nameplate

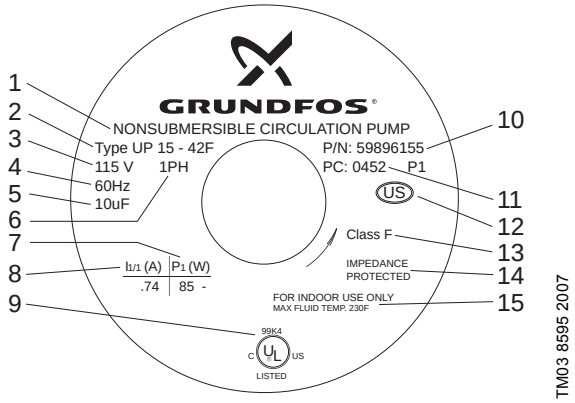

Fig. 1 Nameplate, UP 15-42F

Pos.	Description	
1	Non-submersible pump	
2	Pump type	UP 15-42 F
3	Voltage	115 V
4	Frequency	60 Hz
5	Capacitor	10 µF
6	Single-phase	
7	Power	85 W
8	Current	0.74 A
9	Approval	
10	Product number	59896155
11	04 = year 2004 / 52 = week	
12	Country of origin	
13	Isolation class	F
14	Impedance-protected	
15	Maximum liquid temperature	230 °F (110 °C)

ALPHA2 control panel

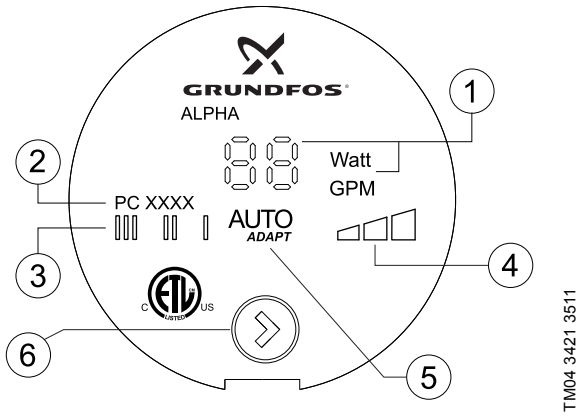

Fig. 2 ALPHA2 control panel

Pos.	Description
1	Display showing the power consumption in watts or the flow rate.
2	Production code:
	• 1st and 2nd figures: year
	• 3rd and 4th figures: week
3	Light field indicating fixed speed.
4	Light field indicating constant pressure.
5	Light field indicating AUTO$_{ADAPT}$.
6	Push-button for selection of pump setting.

5. Applications

The Grundfos circulator pumps, series UP(S), are specifically designed for heating systems. The pumps are also suitable for recirculation of hot domestic water and for circulation of liquid in cooling and air-conditioning systems.

Heating systems

Common uses:

- Boiler/hydronic
- ground-source
- radiant floor
- hydronic and fan-coil
- solar
- heat recovery.

Pump types with a cast iron pump housing are generally used for pumping water or water/glycol mixtures in these closed-system applications. However, when water conditions are not compatible with cast iron, we recommend the use of bronze or stainless steel.

Optional variable-speed and mixing-reset controls are available to customize heat output versus heat demand for increased comfort.

Domestic hot-water systems

Common uses:

- Solar water heating
- hot-water recirculation
- domestic hot-water heating.

Pump types with a bronze, brass or stainless steel pump housing are used for pumping potable water in these open-system applications.

Optional timer and thermostat controls are available to limit pump operation to periods when hot water is required and to save energy.

Cooling systems

Common uses:

- Chilled-water pumping.

We recommend that you use pump types UP(S) 25, 26, 43, 50 and pump housings compatible with the pumped liquids for chilled water due to their motor construction which is suitable for 32 °F (0 °C) water.

Construction

The UP(S) pumps are of the wet-rotor type, i.e. pump and motor form an integral unit without a shaft seal and with only two gaskets for sealing. The bearings are lubricated by the pumped liquid.

The pumps are characterized by these features:

- Ceramic shaft and radial bearings
- carbon thrust bearing
- stainless steel rotor can and bearing plate
- impeller of corrosion-resistant material
- pump housing of cast iron, bronze or stainless steel.

Engineering materials

Description (ALPHA2, ALPHA1)	Material
Controller complete	Composite, PC
Rotor can	Stainless steel
Radial bearing	Ceramics
Shaft	Ceramics
Rotor cladding	Stainless steel
Thrust bearing	Carbon
Thrust bearing retainer	EPDM (ethylene propylene rubber)
Bearing plate	Stainless steel
Impeller	PES composite (30 % glass-filled)
Pump housing	Cast iron or stainless steel
Gaskets	EPDM (ethylene propylene rubber)

Description (UP, closed systems)	Material
Inlet cone, bearing plate, bearing retainers, rotor can, rotor cladding, shaft retainer	Stainless steel
Stator housing	Aluminium
Shaft, upper and lower radial bearings	Aluminium oxide ceramics
Thrust bearing	Carbon bearing and EPDM retainer
Check valve	ACETAL with 302 stainless steel spring and nitrile rubber seats
Pump housing (volute)	Cast iron
O-ring and gaskets	EPDM (ethylene propylene rubber)
Impeller	PES composite (30 % glass-filled)
Terminal box	Noryl® with EPDM gasket

Description (UP, open systems)	Material
Inlet cone, bearing plate, bearing retainers, rotor can, rotor cladding, shaft retainer	Stainless steel
Volute retainer (SU & SF models) and stator housing	Aluminium
Shaft, upper and lower radial bearings	Aluminium oxide ceramics
Thrust bearing	Carbon bearing and EPDM retainer
Pump housing (volute)	Silicon bronze C875 or stainless steel 300 series
O-ring and gaskets	EPDM (ethylene propylene rubber)
Impeller	PES composite (30 % glass-filled)
Terminal box	Noryl® with EPDM gasket

Description (BUC5 and BUC7)	Material
Inlet cone, bearing plate, bearing retainers, rotor can, rotor cladding, shaft retainer, check valve spring	Stainless steel
Stator housing	Aluminium
Shaft, upper and lower radial bearings	Aluminium oxide ceramics
Thrust bearing	Carbon bearing and EPDM retainer
Pump housing (volute)	Silicon bronze C875, lead-free
Tail piece and union nut	Brass (UNS C36000)
O-ring and gaskets	EPDM (ethylene propylene rubber)
Impeller	PES composite (30 % glass-filled)
Terminal box	Noryl® with EPDM gasket
Check valve housing	ACETAL with 302 stainless steel, spring and nitrile rubber seat
Union gasket	EPDM (ethylene propylene rubber)

Installation

The pump must always be installed with the motor shaft in horizontal position. See fig. 3.

Proper installation of the pump will have the terminal box located to one side of the pump or the other with the conduit entry down.

UP(S) pumps can be installed in both vertical and horizontal lines.

UP(S) pumps are intended for indoor use only.

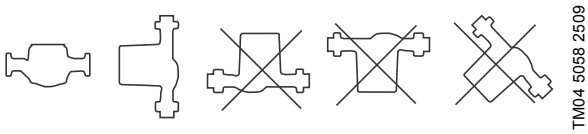

Fig. 3 Acceptable pump positions

Motor

The motor is a 2-pole, asynchronous, squirrel-cage PSC (permanent split capacitor) motor with UL, CUL, ETL and CSA approvals.

UP(S) pumps are available in single-phase 115 V and 230 V versions with one or three speeds.

The terminal box is easily accessible and has functional cables connecting conductors or terminals.

Insulation class(es): F, H.

The motor incorporates thermal overload or impedance protection. Therefore, no external motor protection is required.

UP models are single-speed pumps.

UPS model pumps are multi-speed pumps, and the speed can be changed by means of a speed selector switch located on the front of the terminal box.

To access the speed selector switch for UPS 15-35 and 15-55 TLC models, first remove the timer box lid.

UP models with VS or MR suffixes are variable-speed pumps with integrated control.

Depending on the pump model, motor horsepowers range from 1/25 to 1/6 and power consumption from 5 to 385 W.

Pumped liquids

Depending on the type, Grundfos circulator pumps are designed for the following liquids:

- Potable water
- non-potable water
- water-glycol mixtures
- chilled water
- domestic hot water
- softened water.

If the circulator pump is used for a glycol mixture with a higher viscosity than that of water, the hydraulic performance of the pump will be reduced.

Example: 50 % glycol at 68 °F (20 °C) means a viscosity of approx. 10 cSt and a reduction of pump performance by approx. 15 %.

When selecting a pump, the viscosity of the pumped liquid must be taken into consideration.

Ambient and liquid temperatures

UP(S)

The maximum allowable water temperature is determined by the ambient air temperature as shown in the table below.

Maximum water temperature					
Ambient [°F (°C)]	104 (40)	120 (49)	140 (60)	160 (71)	175 (79)
Water, all cast iron [°F (°C)]	230 (110)	220 (104)	210 (99)	190 (88)	175 (79)
Water, all bronze and stainless steel	220 (104)	210 (99)	190 (88)	175 (79)	
The pump models below are exceptions to the temperatures listed above:					
UP/UPS 15 FC and UP 43 FC [°F (°C)]	200 (93)	190 (88)	180 (82)	170 (77)	
UP 15 BUC5 and UP 15 BUC7 [°F (°C)]	200 (93)	190 (88)	180 (82)	170 (77)	
UPS 15-35 [°F (°C)]	165 (74)	140 (60)	-	-	-
UP 15-100 F [°F (°C)]	205 (96)	195 (91)	185 (85)	175 (79)	-
UP 26-120 U [°F (°C)]	205 (96)	195 (91)	185 (85)	175 (79)	-
UP 26-116 [°F (°C)]	150 (66)	140 (60)	-	-	-

Note: This table refers to all standard products without timer, control options or other special features.

- If the UP pump is equipped with a timer, the maximum liquid temperature is 150 °F (66 °C).
- Temperature requirements for pumps with timer, control or other special features may be found on their technical data page. See section *Technical data*, pages 45-88.

The ambient temperature for standard pumps with a permissible liquid temperature from 36 °F (2 °C) to 230 °F (110 °C) must always be lower than the liquid temperature as condensation may otherwise form in the stator housing.

ALPHA2, ALPHA1

Ambient temperature: 32 °F (0 °C) to 104 °F (40 °C).
Liquid temperature: 36 °F (2 °C) to 230 °F (110 °C).

To avoid condensation in the control box and stator, the liquid temperature must always be higher than the ambient temperature. In domestic hot water systems, keep the liquid temperature below 149 °F (65 °C) to eliminate the risk of lime precipitation.

Ambient temperature [°F (°C)]	Liquid temperature	
	Minimum [°F (°C)]	Maximum [°F (°C)]
32 (0)	36 (2)	230 (110)
50 (10)	50 (10)	230 (110)
68 (20)	68 (20)	230 (110)
86 (30)	86 (30)	230 (110)
95 (35)	95 (35)	194 (90)
104 (40)	104 (40)	158 (70)

Note: The maximum glycol concentration with clean water is 50 % glycol @ 36 °F (2 °C). A hydraulic performance change can be expected.

Maximum system pressure

145 psi (10 bar).

Minimum inlet pressure

The required minimum inlet pressure must be available at the pump inlet. The pressure required at the inlet of the pump is a function of the temperature of the water as shown in the tables below.

UP(S) models

UP(S) model	Liquid temperature							
	140 °F (60 °C)		165 °F (74 °C)		190 °F (88 °C)		230 °F (110 °C)	
	[psi]	[bar]	[psi]	[bar]	[psi]	[bar]	[psi]	[bar]
UP(S) 15	1.3	0.1	1.9	0.1	4.0	0.3	15.6	1.1
UP(S) 26								
UP(S) 43								
UPS 26-150			1.3	0.09	2.6	0.18	7.8	0.54
UPS 43-100			2.1	0.15	5.6	0.40	11.3	0.80
UPS 50-60	0.5	0.04	1.0	0.07	1.3	0.09	7.0	0.49

ALPHA2, ALPHA1 models

Liquid temperature [°F (°C)]	Minimum inlet pressure [psi (bar)]
167 (75)	0.75 (0.05)
194 (90)	4.06 (0.28)
230 (110)	15.7 (1.08)

Performance

UP(S) models

Flow range: 0-120 gpm (0 - 27.3 m^3/h)

Head range: 0-46 ft (0-14 m)

ALPHA2 models

Flow range: 0 - 21.5 gpm (0 - 4.9 m^3/h).

Head range: 0-19 ft (0 - 5.8 m).

ALPHA1 models

Flow range: 0-17 gpm (0 - 3.9 m^3/h).

Head range: 0-19 ft (0 - 5.8 m).

6. Technical data

UP 10-16 Comfort PM, PM Auto

UP 10-16 A/T/PM B5/BN5/BU

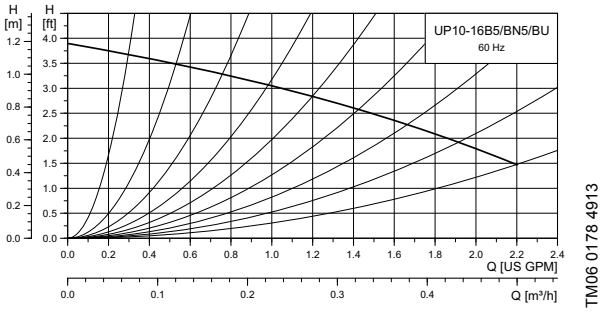

Flow range:	0 - 2.2 gpm (0 - 0.5 m^3/h)
Head range:	0 - 3.9 ft (0 - 1.2 m)
Motor:	Single-phase
Max. liquid temperature:	176 °F (80 °C)
Min. liquid temperature:	36 °F (2 °C)
Max. system pressure:	145 psi (10 bar)

Model	Volts	Amps	Watts	Hp	Capacitor
UP 10-16 B5/ BN5/BU	115/208-230 V	0.23	6	0.008	-

Approvals

c UL US LISTED

CLASSIFIED c UL US
WATER QUALITY
NSF/ANSI 61
Drinking Water System Components
In Accordance with NSF/ANSI 372

UP 10-16 PM B5, BN5
A/T/PM B5, BN5

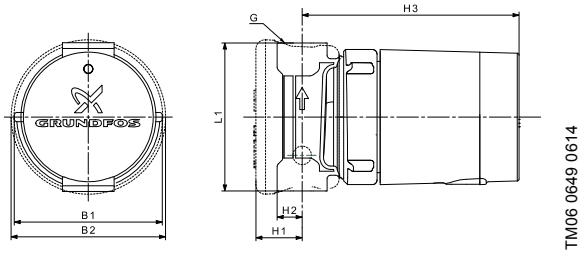

UP 10-16 A PM BU

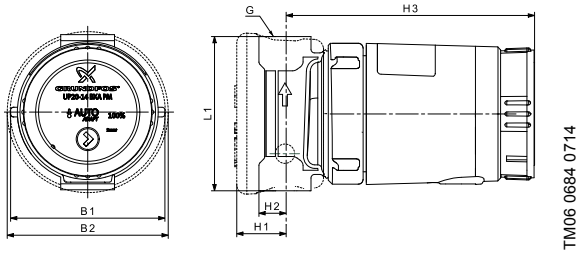

Model	Product number 115/208-230 V	Dimensions [inches (mm)]							Shipping weight [lbs (kg)]
		L1	H1	H2	H3	B1	B2	Connection	
UP10-16 PM B5/LC	98420206	3.13 (79)	1.0 (25.4)	0.5 (12.7)	5.25 (133)	2.6 7 (68)	3.28 (83)	1/2" sweat	2.9 (1.3)
UP10-16 PM BN5/LC	98420210	3.13 (79)		0.5 (12.7)				1/2" NPT	3.4 (1.5)
UP10-16 A PM B5/LC	98420222	3.13 (79)		0.5 (12.7)				1/2" sweat	2.9 (1.3)
UP10-16 A PM BN5/LC	98420223	3.13 (79)		0.5 (12.7)				1/2" NPT	3.4 (1.5)
UP10-16 T PM B5/LC	99279870	3.13 (79)		0.5 (12.7)				1/2" NPT	3.4 (1.5)
UP10-16 A PM BU/LC	98420224	4.33 (110)		0.88 (23)				1 1/4" NPSM	3.8 (1.7)

Note: All models above have a 6 ft (1.8 m), 3-prong power cord.
Maximum external sensor cable length 8 ft (2.4 m).
UP 10-16 A PM BU/LC with integral check valve.
Dimensions in inches unless otherwise stated.

UP 10-16 Comfort PM, PM Auto, PM Temperature

The UP 10-16 pump is designed for recirculation of domestic hot water in single-family homes with dedicated hot-water return piping. Utilizing a low-noise permanent magnet motor, energy consumption is reduced to as little as 6 W. Selecting the Auto mode ensures that the pump runs only when required. The result is maximum comfort - no waiting for hot water plus decreased water and power consumption.

TM06 0034 4713

Fig. 4 UP 10-16 APM BU/LC

Applications

- Domestic hot-water recirculation systems in single-family homes
- small heating systems.

Pumped liquids

- Domestic hot water
- softened water
- clean water.

The pump uses two temperature sensors, one within the pump and the other connected to the pump by a cable installed on the hot-water flow pipe. The pump is installed in the hot-water return pipe.

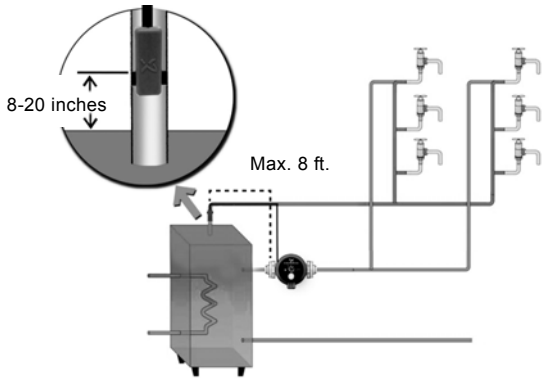

TM06 1073 1514

UP 10-16 A/T/PM pump with built-in temperature sensor

Three operating modes

100 % mode

- The pump will operate 24/7/365 continuously at full speed.

Temperature mode

- The pump will keep the water temperature within an automatically detected range.

Auto mode

- The pump will learn, store and adapt operating times to domestic hot water consumption patterns.

Disinfection and flushing

- Once a week, a disinfection function is run for 15 minutes. If a higher temperature is measured at another time of the week, the disinfection function will run at this time.
- After eight hours of no operation, the pump automatically flushes the circulation pipe for 15 minutes.

Vacation feature

If no tappings are detected within a 24-hour period, the pump will automatically switch to standby mode (except for disinfection) and reactivate to the same consumptive pattern when two tappings occur within a 20-minute time period (self-modulation).

Motor

The motor has a single-phase, 12-pole, permanent-magnet design and is double insulated. No additional motor protection is required.

Voltage	1 x 115/208-230 V, 50/60 Hz
Power	5 - 8.5 watts
Enclosure class	IP42, type PM: IP44
Insulation class	F

Maximum system pressure

145 psi (10 bar).

Ambient and liquid temperatures

The ambient temperature must always be lower than the liquid temperature as otherwise condensation may otherwise form in the stator housing.

Liquid temperature: 36 °F (2 °C) to 176 °F (80 °C).

We recommend that you keep the operating temperature as low as possible (e.g. 140 °F (60 °C)) to avoid calcium precipitation.

Description	Material
Stator housing	Aluminium
Spherical separator	Stainless steel
Rotor can, complete	Stainless steel/Tungsten carbide
Rotor, impeller	Stainless steel, EPDM, PPO, PFTE, graphite
Pump housing	EcoBrass
Gate valve	EcoBrass
Screw	Stainless steel
Terminal box cover	PC/ABS
Motor cover	PPO
Power cable jacket	PVC
O-rings	EPDM
Check valve	POM
Light	Lexan
Insulation cover	EPP 55
External sensor cable	PC/ABS

UP 15-10 B5/B7

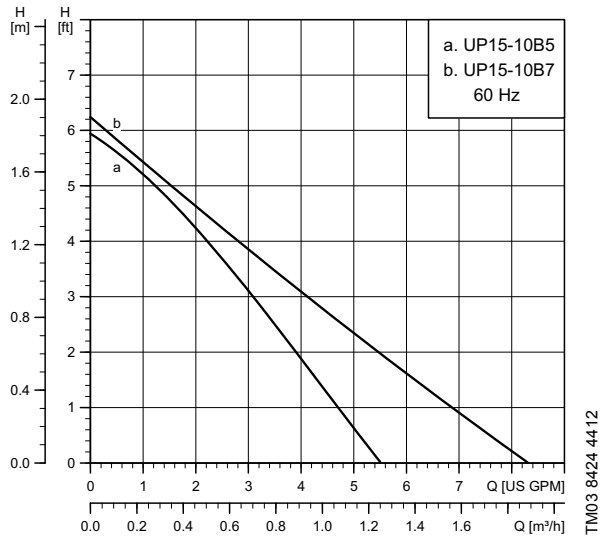

Flow range:	0 - 8.2 gpm (0 - 1.9 m^3/h)
Head range:	0 - 6.2 ft (0 - 1.9 m)
Motor:	2-pole, single-phase
Max. liquid temperature:	220 °F (104 °C)
Min. liquid temperature:	36 °F (2 °C)
Max. system pressure:	145 psi (10 bar)

Note: If the UP pump is equipped with a timer, the maximum liquid temperature is 150 °F (66 °C).

Model	Volts	Amps	Watts	Hp	Capacitor
UP 15-10 B5 and B7	115	0.22	25	0.034	2 µF / 400 V

Approvals

c UL US LISTED

CLASSIFIED c UL US
WATER QUALITY
NSF/ANSI 61
Drinking Water System Components
In Accordance with NSF/ANSI 372

UP 15-10 B5, UP 15-10 B5/LC, UP 15-10 B5/TLC

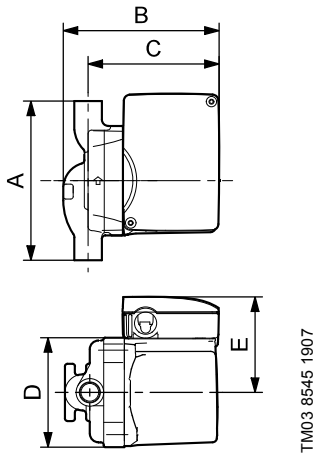

UP 15-10 B7, UP 15-10 B7/LC, UP 15-10 B7/TLC

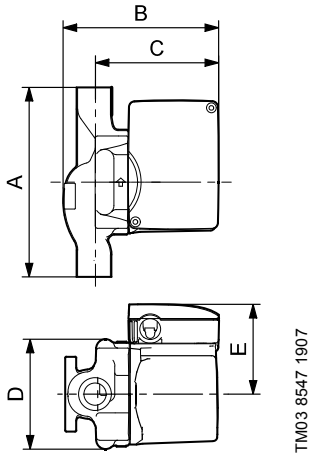

Model	Product number 115 V	Dimensions [inches (mm)]					Connection type and size	Shipping weight [lbs (kg)]
		A	B	C	D	E		
UP 15-10 B5	59896213	5.00 (127)	5.00 (127)	4.13 (105)	3.50 (89)	2.85 (72)	1/2" sweat	6.0 (2.7)
UP 15-10 B5/LC	59896214	5.00 (127)	5.00 (127)	4.13 (105)	3.50 (89)	2.85 (72)	1/2" sweat	6.5 (2.9)
UP 15-10 B5/TLC	99452454	5.00 (127)	5.00 (127)	4.13 (105)	3.50 (89)	2.85 (72)	1/2" sweat	6.5 (2.9)
UP 15-10 B7	59896226	6.38 (162)	5.25 (133)	4.13 (105)	3.50 (89)	2.85 (72)	3/4" sweat	6.7 (3.0)
UP 15-10 B7/LC	59896209	6.38 (162)	5.25 (133)	4.13 (105)	3.50 (89)	2.85 (72)	3/4" sweat	7.5 (3.4)
UP 15-10 B7/TLC	99452455	6.38 (162)	5.25 (133)	4.13 (105)	3.50 (89)	2.85 (72)	3/4" sweat	7.5 (3.4)

Note: LC/TLC models have a 6 ft (1.8 m), 3-prong power cord.
Dimensions in inches unless otherwise stated.

UP 15-10 BUC5/BUC7

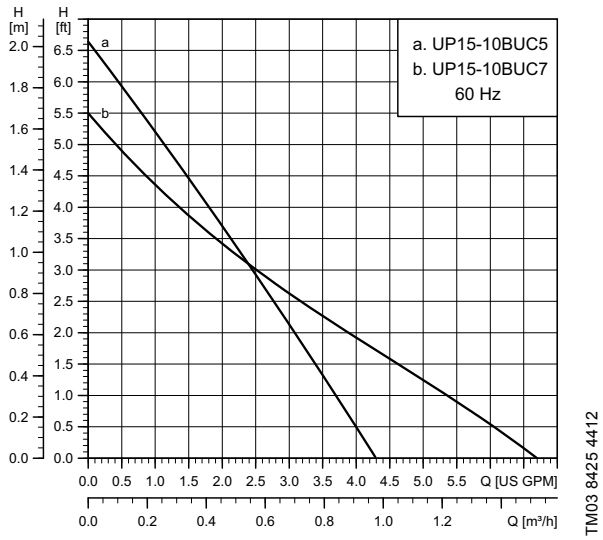

Flow range:	0 - 6.6 gpm (0 - 1.5 m^3/h)
Head range:	0 - 6.6 ft (0-2 m)
Motor:	2-pole, single-phase
Max. liquid temperature:	230 °F (110 °C)
Min. liquid temperature:	36 °F (2 °C)
Max. system pressure:	145 psi (10 bar)

Note: If the UP pump is equipped with a timer, the maximum liquid temperature is 150 °F (66 °C).

Model	Volts	Amps	Watts	Hp	Capacitor
UP 15-10 BUC5/BUC7	115	0.22	25	0.034	2 µF / 400 V

Approvals

c UL US LISTED

CLASSIFIED c UL US
WATER QUALITY
NSF/ANSI 61
Drinking Water System Components
In Accordance with NSF/ANSI 372

UP 15-10 BUC5, UP 15-10 BUC5/LC, UP 15-10 BUC5/TLC

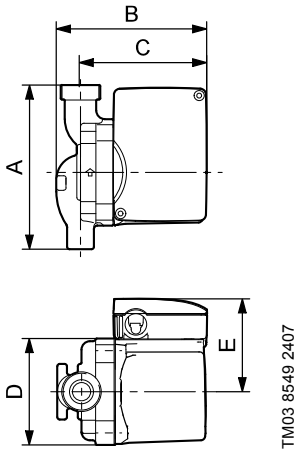

UP 15-10 BUC7, UP 15-10 BUC7/LC, UP 15-10 BUC7/TLC

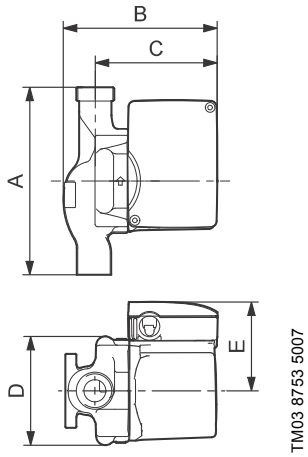

Model	Product number 115 V	Dimensions [inches (mm)]					Connection type and size	Shipping weight [lbs (kg)]
		A	B	C	D	E		
UP 15-10 BUC5	59896225	5.31 (135)	5.00 (127)	4.13 (105)	3.50 (89)	2.85 (72)	1/2" sweat	7.3 (3.3)
UP 15-10 BUC5/LC	59896237	5.31 (135)	5.00 (127)	4.13 (105)	3.50 (89)	2.85 (72)	1/2" sweat	7.7 (3.5)
UP 15-10 BUC5/TLC	99452457	5.31 (135)	5.00 (127)	4.13 (105)	3.50 (89)	2.85 (72)	1/2" sweat	7.7 (3.5)
UP 15-10 BUC7	59896241	6.70 (170)	5.25 (133)	4.13 (105)	3.50 (89)	2.85 (72)	3/4" sweat	8.0 (3.6)
UP 15-10 BUC7/LC	59896239	6.70 (170)	5.25 (133)	4.13 (105)	3.50 (89)	2.85 (72)	3/4" sweat	8.5 (3.9)
UP 15-10 BUC7/TLC	99452458	6.70 (170)	5.25 (133)	4.13 (105)	3.50 (89)	2.85 (72)	3/4" sweat	8.5 (3.9)

Note: LC/TLC models have a 6 ft (1.8 m), 3-prong power cord.
Dimensions in inches unless otherwise stated.

UP 15-10 F/FR

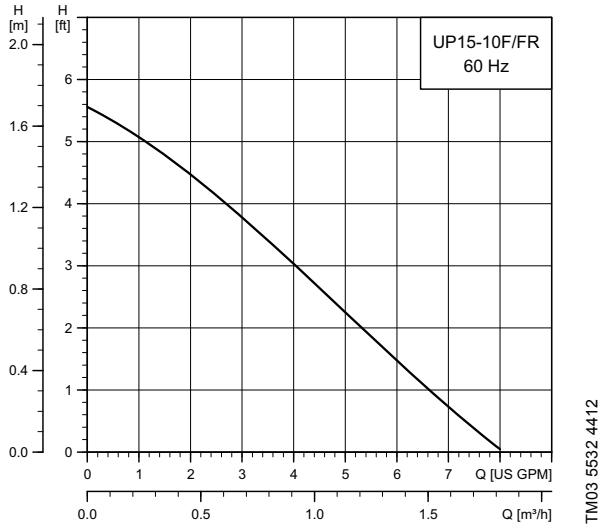

Flow range:	0 - 8.0 gpm (0 - 1.8 m^3/h)
Head range:	0 - 5.5 ft (0 - 1.7 m)
Motor:	2-pole, single-phase
Max. liquid temperature:	230 °F (110 °C)
Min. liquid temperature:	36 °F (2 °C)
Max. system pressure:	145 psi (10 bar)
Closed system	

Model	Volts	Amps	Watts	Hp	Capacitor
UP 15-10 F/FR	115	0.23	25	0.034	2 µF / 400 V

Approvals

c UL US LISTED

UP 15-10 F

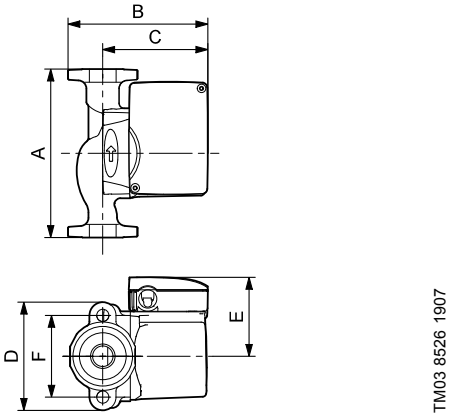

UP 15-10 FR

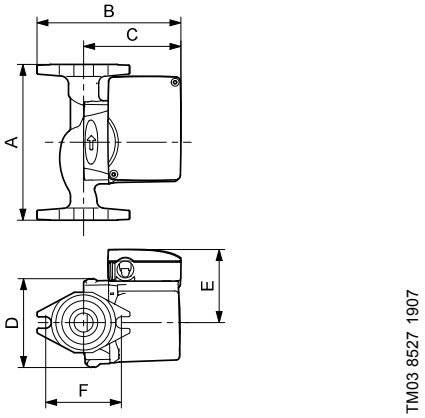

Model	Product number 115 V	Dimensions [inches (mm)]						Connection type and size	Shipping weight [lbs (kg)]
		A	B	C	D	E	F		
UP 15-10 F	59896248	6.50 (165)	5.25 (133)	4.00 (102)	4.19 (106)	3.25 (83)	3.16 (80)	GF 15/26 flange (2) 1/2" dia. bolt holes	7.3 (3.3)
UP 15-10 FR	59896249	6.50 (165)	5.94 (151)	4.00 (102)	3.75 (95)	3.25 (83)	3.16 (80)	GF 15/26 flange (2) 1/2" dia. bolt holes	7.3 (3.3)

Note: Dimensions in inches unless otherwise stated.

UP Comfort System

UP 15-10 SU7P/TLC

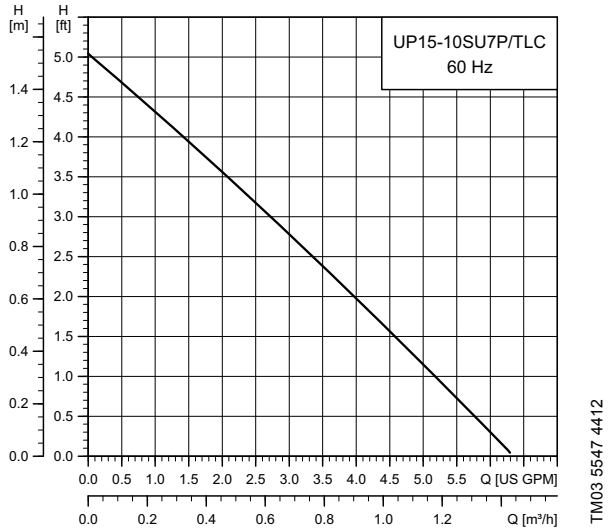

Flow range:	0 - 6.3 gpm (0 - 1.4 m^3/h)
Head range:	0 - 5.1 ft (0 - 1.6 m)
Motor:	2-pole, single-phase
Max. liquid temperature:	150 °F (66 °C)
Min. liquid temperature:	36 °F (2 °C)
Max. system pressure:	145 psi (10 bar)
Open system	

Model	Volts	Amps	Watts	Hp	Capacitor
UP 15-10 SU7P/TLC	115	0.23	25	0.034	2 µF / 400 V

Approvals

c UL US LISTED

UPC

CLASSIFIED c UL US
WATER QUALITY
NSF/ANSI 61
Drinking Water System Components
In Accordance with NSF/ANSI 372

UP 15-10 SU7P/DTLC (with digital timer)

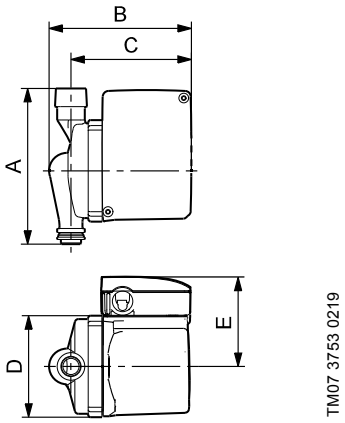

UP 15-10 SU7P/TLC (with analog timer)

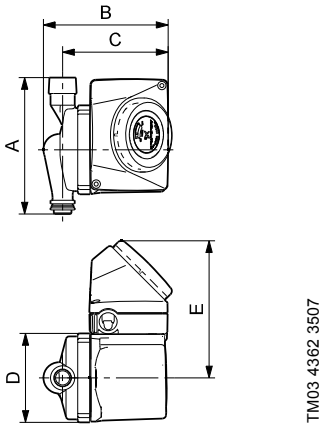

Comfort Valve®

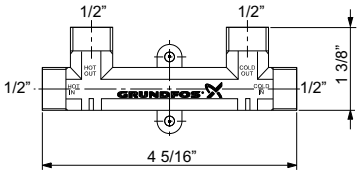

Model	Product number 115 V	Dimensions [inches (mm)]					Connection type and size	Shipping weight [lbs (kg)]
		A	B	C	D	E		
UP 15-10 SU7P/DTLC	99452459	5.63 (143)	5.25 (133)	4.50 (114)	3.50 (89)	2.95 (72)	3/4" M x 3/4" FNPT	5.5 (2.5)
UP 15-10 SU7P/TLC	595916	5.63 (143)	5.25 (133)	4.50 (114)	3.50 (89)	5.33 (135)	3/4" M x 3/4" FNPT	5.5 (2.5)
Comfort Valve®	595926	-	-	-	-	-	1/2" M NPS (1/2" faucet)	2.8 (1.3)
Flex hose kit	599390	-	-	-	-	-	(2) 1/2" FNPS x 1/2" FNPS x 12" flex hoses	-

Model	Product number	Description
Comfort Valve®	595926	Box of 15 pieces
Comfort series kit with digital timer	99452459	1 pump and 1 valve, (2) 1/2" FNPS x 1/2" FNPS x 12" flex hoses
Comfort series kit with analog timer	595916	1 pump and 1 valve, (2) 1/2" FNPS x 1/2" FNPS x 12" flex hoses

Note: All models have a 10 ft (3 m), 3-prong power cord.
Dimensions in inches unless otherwise stated.

UP 15-18 B5/B7

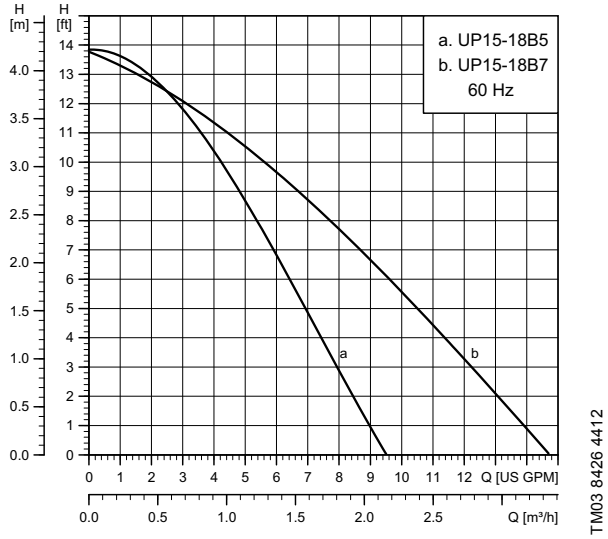

Flow range:	0 - 14.7 gpm (0 - 3.3 m^3/h)
Head range:	0 - 13.9 ft (0 - 4.2 m)
Motor:	2-pole, single-phase
Max. liquid temperature:	230 °F (110 °C)
Min. liquid temperature:	36 °F (2 °C)
Max. system pressure:	145 psi (10 bar)

Note: If the UP pump is equipped with a timer, the maximum liquid temperature is 150 °F (66 °C).

Model	Volts	Amps	Watts	Hp	Capacitor
UP 15-18 B5	115	0.74	86	0.115	10 µF / 180 V
	230	0.4	90	0.121	2 µF / 400 V
UP 15-18 B7	115	0.74	86	0.115	10 µF / 180 V
	230	0.4	96	0.129	2 µF / 400 V

Approvals

c UL US LISTED

CLASSIFIED c UL US
WATER QUALITY
NSF/ANSI 61
Drinking Water System Components
In Accordance with NSF/ANSI 372

UP 15-18 B5/LC, UP 15-18 B5/TLC

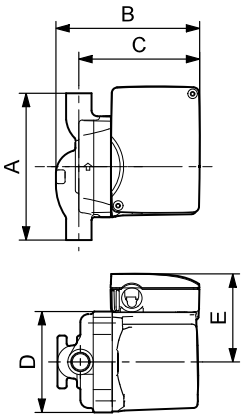

UP 15-18 B7/LC, UP 15-18 B7/TLC

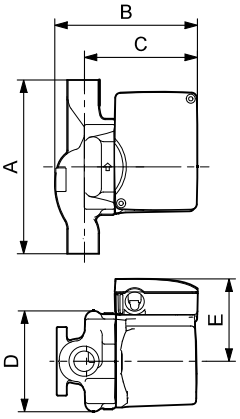

Model	Product number		Dimensions [inches (mm)]					Connection type and size	Shipping weight [lbs (kg)]
	115 V	230 V	A	B	C	D	E		
UP 15-18 B5	59896114	59896118	5.31 (135)	5.00 (127)	4.13 (105)	3.50 (89)	2.85 (72)	1/2" sweat	6.0 (2.7)
UP 15-18 B5/LC	59896211	-	5.31 (135)	5.00 (127)	4.13 (105)	3.50 (89)	2.85 (72)	1/2" sweat	6.5 (2.9)
UP 15-18 B5/TLC	99452460	-	5.31 (135)	5.00 (127)	4.13 (105)	3.50 (89)	2.85 (72)	1/2" sweat	6.5 (2.9)
UP 15-18 B7	59896121	59896119	6.70 (170)	5.25 (133)	4.13 (105)	3.50 (89)	2.85 (72)	3/4" sweat	6.7 (3.0)
UP 15-18 B7/LC	59896229	-	6.70 (170)	5.25 (133)	4.13 (105)	3.50 (89)	2.85 (72)	3/4" sweat	7.2 (3.3)
UP 15-18 B7/TLC	99452461	-	6.70(170)	5.25 (133)	4.13 (105)	3.50 (89)	2.85 (72)	3/4" sweat	7.2 (3.3)

Note: LC/TLC models have a 6 ft (1.8 m), 3-prong power cord.
Dimensions in inches unless otherwise stated.

UP 15-18 BUC5/BUC7

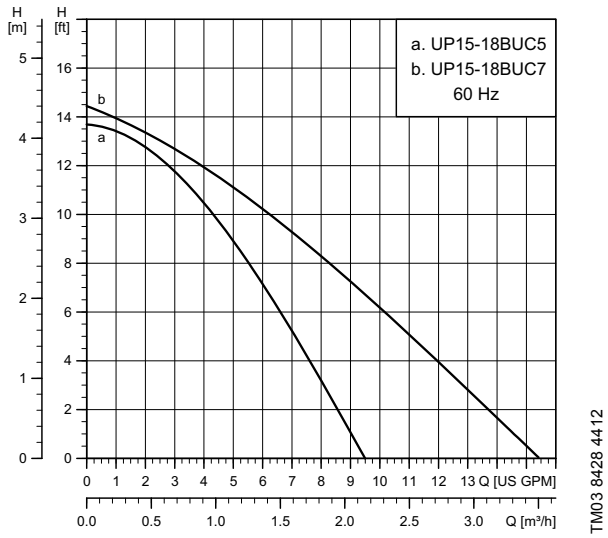

Flow range:	0 - 14.7 gpm (0 - 3.3 m^3/h)
Head range:	0 - 14.5 ft (4.4 m)
Motor:	2-pole, single-phase
Max. liquid temperature:	230 °F (110 °C)
Min. liquid temperature:	36 °F (2 °C)
Max. system pressure:	145 psi (10 bar)

Model	Volts	Amps	Watts	Hp	Capacitor
UP 15-18 BUC5	115	0.74	86	0.115	10 µF / 180 V
UP 15-18 BUC7	115	0.74	86	0.115	10 µF / 180 V

Approvals

c UL US LISTED

CLASSIFIED c UL US
WATER QUALITY
NSF/ANSI 61
Drinking Water System Components
In Accordance with NSF/ANSI 372

UP 15-18 BUC5

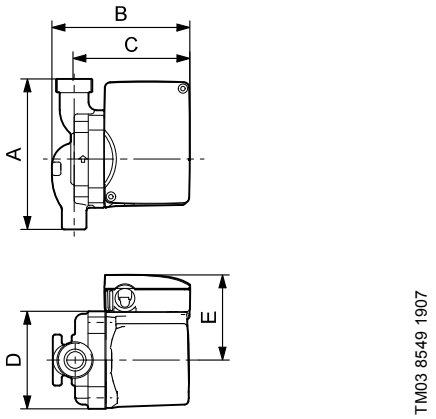

UP 15-18 BUC7

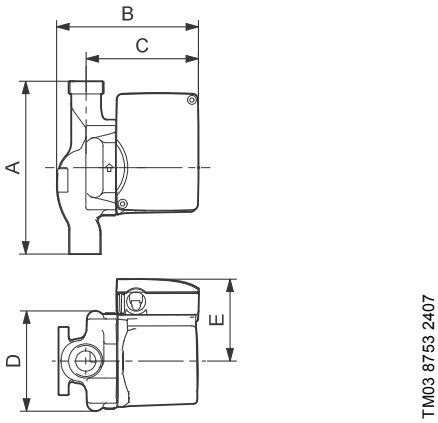

Model	Product number 115 V	Dimensions [inches (mm)]					Connection type and size	Shipping weight [lbs (kg)]
		A	B	C	D	E		
UP 15-18 BUC5	59896123	5.31 (135)	5.00 (127)	4.13 (105)	3.50 (89)	2.85 (72)	1/2" sweat	7.3 (3.3)
UP 15-18 BUC7	59896124	6.70 (170)	5.25 (133)	4.13 (105)	3.50 (89)	2.85 (72)	3/4" sweat	8.0 (3.6)

Note: Dimensions in inches unless otherwise stated.

UP 15-29 SU/SF

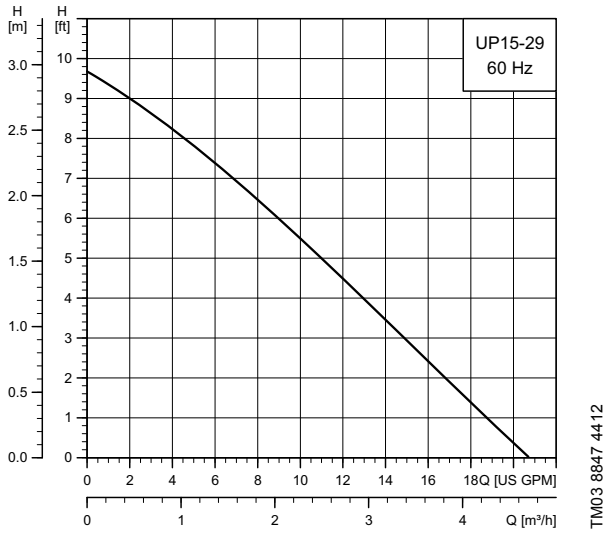

Flow range: 0 - 20.5 gpm (0 - 4.7 m^3/h)

Head range: 0 - 9.7 ft (0 - 2.2 m)

Motor: 2-pole, single-phase

Max. liquid temperature: 230 °F (110 °C)

Min. liquid temperature: 36 °F (2 °C)

Max. system pressure: 145 psi (10 bar)

Open system

Note: If the UP pump is equipped with a timer, the maximum liquid temperature is 150 °F (66 °C).

Model	Volts	Amps	Watts	Hp	Capacitor
UP 15-29 SF	115	0.75	87	0.117	10 µF / 180 V
UP 15-29 SUC		0.75	87	0.117	
UP 15-29 SU	230	0.42	97	0.130	2 µF / 400 V

Approvals

c UL US LISTED

CLASSIFIED c UL US
WATER QUALITY
NSF/ANSI 61
Drinking Water System Components
In Accordance with NSF/ANSI 372

UP 15-29 SF

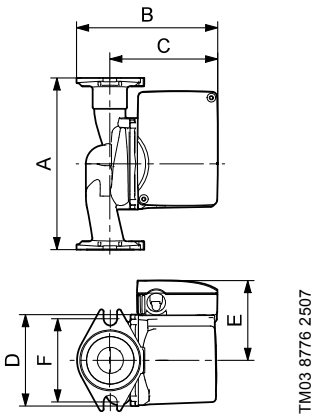

UP 15-29 SU

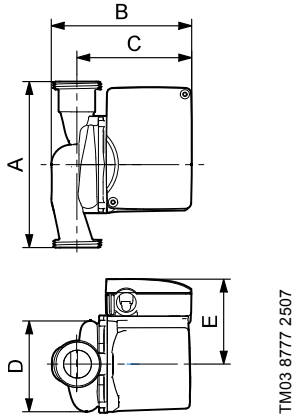

UP 15-29 SU/LC, UP 15-29 SU/TLC

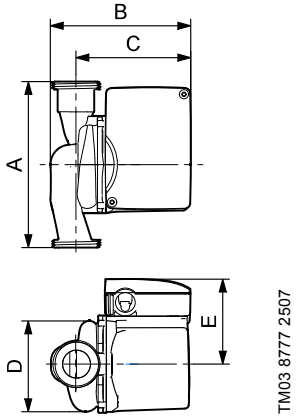

Model	Product number		Dimensions [inches (mm)]						Connection type and size	Shipping weight [lbs (kg)]
	115 V	230 V	A	B	C	D	E	F		
UP 15-29 SF	59896771	-	6.50 (165)	5.50 (140)	4.13 (105)	3.88 (98)	2.94 (75)	3.13 (79)	GF 15/26	6.0 (2.7)
UP 15-29 SU	59896775	59896784	5.88 (149)	5.50 (140)	4.13 (105)	3.44 (88)	2.94 (75)	-	GU 125	5.4 (2.5)
UP 15-29 SU/LC	59896776	-	5.88 (149)	5.50 (140)	4.13 (105)	3.44 (88)	2.94 (75)	-	GU 125	5.7 (2.6)
UP 15-29 SUC/TLC	99452462	-	5.88 (149)	5.50 (140)	4.13 (105)	3.44 (88)	2.94 (75)	-	GU 125	6.2 (2.8)

Note: LC/TLC models have a 6 ft (1.8 m), 3-prong power cord.
Dimensions in inches unless otherwise stated.

UP 15-35 SUC

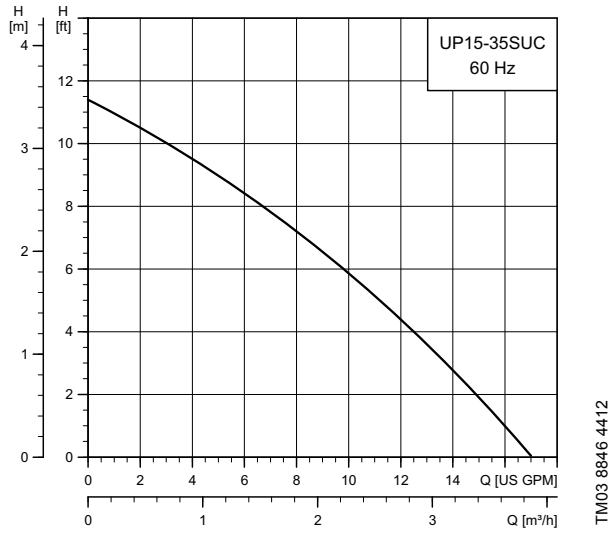

Flow range:	0 - 17.5 gpm (0 - 4.0 m^3/h)
Head range:	0 - 11.5 ft (3.5 m)
Motor:	2-pole, single-phase
Max. liquid temperature:	230 °F (110 °C)
Min. liquid temperature:	36 °F (2 °C)
Max. system pressure:	145 psi (10 bar)
Open system	

Model	Volts	Amps	Watts	Hp	Capacitor
UP 15-35 SUC	230	0.50	114	0.153	2 µF / 400 V

Approvals

c UL US LISTED

CLASSIFIED c UL US
WATER QUALITY
NSF/ANSI 61
Drinking Water System Components
In Accordance with NSF/ANSI 372

UP 15-35 SUC

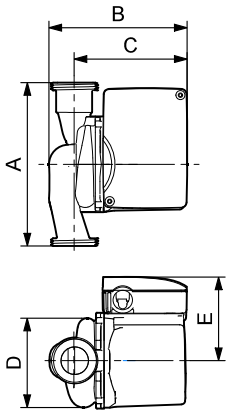

Model	Product number 230 V	Dimensions [inches (mm)]						Connection type and size	Shipping weight [lbs (kg)]
		A	B	C	D	E	F		
UP 15-35 SUC	59896785	5.88 (149)	5.06 (129)	4.13 (105)	3.44 (87)	2.94 (75)	-	GU 125	5.4 (2.5)

Note: Dimensions in inches unless otherwise stated.

UPS 15-35 SUC/SFC

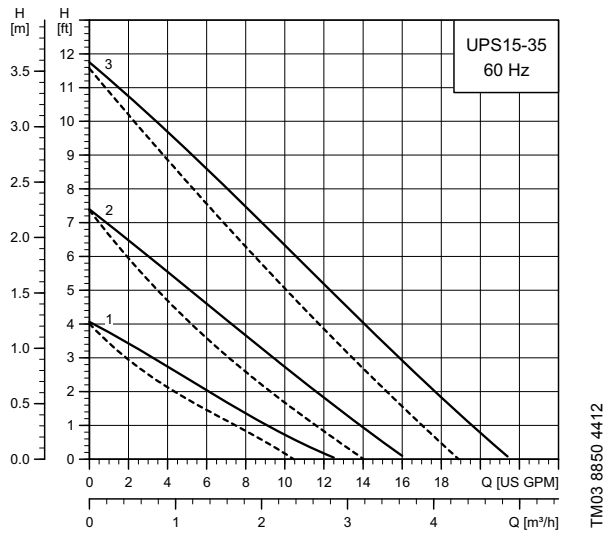

Flow range:	0 - 21.5 gpm (0 - 4.9 m^3/h)
Head range:	0-12 ft (0 - 3.7 m)
Motor:	2-pole, single-phase
Max. liquid temperature:	165 °F (74 °C)
Min. liquid temperature:	36 °F (2 °C)
Max. system pressure:	145 psi (10 bar)

Note: If the UP pump is equipped with a timer, the maximum liquid temperature is 150 °F (66 °C).

Model	Speed	Volts	Amps	Watts	Hp	Capacitor
UPS 15-35 SUC/ SFC	3	115	0.95	110	0.148	10 µF / 180 V
	2		0.75	84	0.113	
	1		0.55	61	0.082	

——— Without check valve

- – – - With check valve

Approvals

c UL US LISTED

CLASSIFIED c UL US
WATER QUALITY
NSF/ANSI 61
Drinking Water System Components
In Accordance with NSF/ANSI 372

UPS 15-35 SFC,
UPS 15-35 SUC/TLC

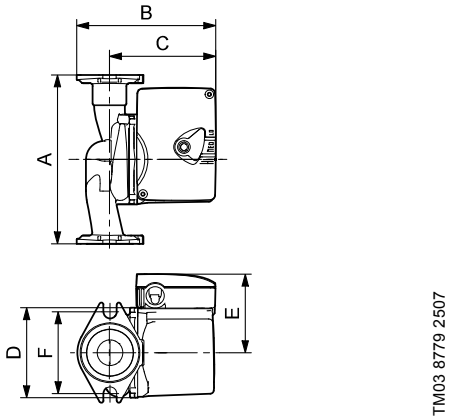

Model	Product number 115 V	Dimensions [inches (mm)]						Connection type and size	Shipping weight [lbs (kg)]
		A	B	C	D	E	F		
UPS 15-35 SFC	59896772	6.50 (165)	5.50 (140)	4.13 (105)	3.88 (99)	2.85 (72)	3.13 (80)	GF 15/26	6.0 (2.7)
UPS 15-35 SUC	59896778	5.88 (149)	5.06 (129)	4.13 (105)	3.44 (87)	2.85 (72)	-	GU 125	5.4 (2.5)
UPS 15-35 SUC/TLC	99452478	5.88 (149)	5.06 (129)	4.13 (105)	3.44 (87)	2.85 (72)	-	GU 125	6.2 (2.8)

Note: LC/TLC models have a 6 ft (1.8 m), 3-prong power cord.
Removable check valve.
Dimensions in inches unless otherwise stated.

UP 15-42 B5/B7

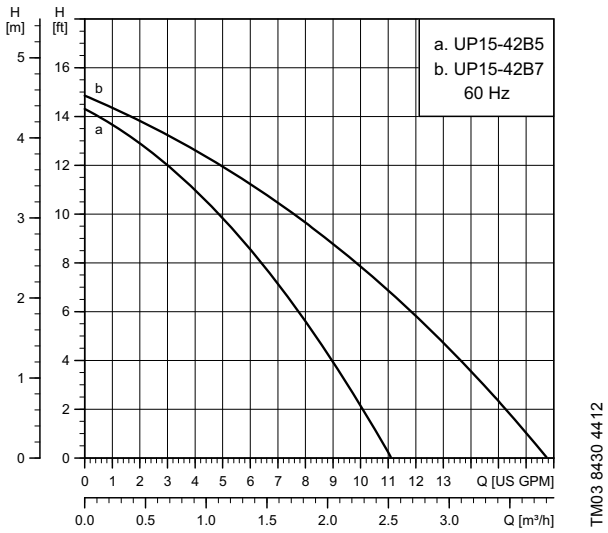

Flow range:	0-17 gpm (0 - 3.9 m^3/h)
Head range:	0-15 ft (0 - 4.6 m)
Motor:	2-pole, single-phase
Max. liquid temperature:	230 °F (110 °C)
Min. liquid temperature:	36 °F (2 °C)
Max. system pressure:	145 psi (10 bar)

Note: If the UP pump is equipped with a timer, the maximum liquid temperature is 150 °F (66 °C).

Model	Volts	Amps	Watts	Hp	Capacitor
UP 15-42 B5	115	0.74	85	0.114	10 µF / 180 V
	230	0.41	95	0.128	2 µF / 400 V
UP 15-42 B7	115	0.74	85	0.114	10 µF / 180 V
	230	0.41	95	0.128	2 µF / 400 V

Approvals

c UL US LISTED

CLASSIFIED c UL US
WATER QUALITY
NSF/ANSI 61
Drinking Water System Components
In Accordance with NSF/ANSI 372

UP 15-42 B5/LC, UP 15-42 B5/TLC and B7

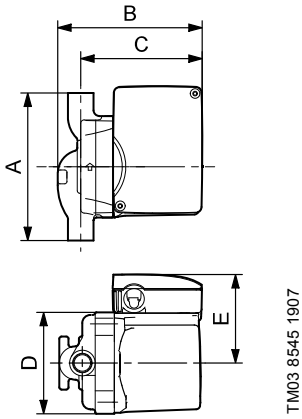

UP 15-42 B7/LC, UP 15-42 B7/TLC

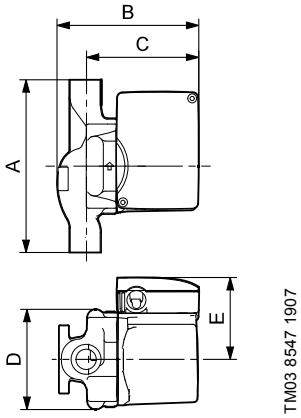

Model	Product number		Dimensions [inches (mm)]					Shipping weight [lbs (kg)]
	115 V	230 V	A	B	C	D	E	
UP 15-42 B5	59896145	59896142	5.31 (135)	5.00 (127)	4.13 (105)	3.50 (89)	2.85 (72)	13.2 (6.0)
UP 15-42 B5/LC	59896233	-	5.31 (135)	5.00 (127)	4.13 (105)	3.50 (89)	2.85 (72)	14.3 (6.5)
UP 15-42 B5/TLC	99452473	-	5.31 (135)	5.00 (127)	4.13 (105)	3.50 (89)	2.85 (72)	14.3 (6.5)
UP 15-42 B7	59896146	59896149	6.70 (170)	5.25 (133)	4.13 (105)	3.50 (89)	2.85 (72)	14.7 (6.7)
UP 15-42 B7/LC	59896235	-	6.70 (170)	5.25 (133)	4.13 (105)	3.50 (89)	2.85 (72)	15.8 (7.2)
UP 15-42 B7/TLC	99452477	-	6.70 (170)	5.25 (133)	4.13 (105)	3.50 (89)	2.85 (72)	15.8 (7.2)

Note: LC/TLC models have a 6 ft (1.8 m), 3-prong power cord.
Dimensions in inches unless otherwise stated.

UP 15-42 BUC5/BUC7

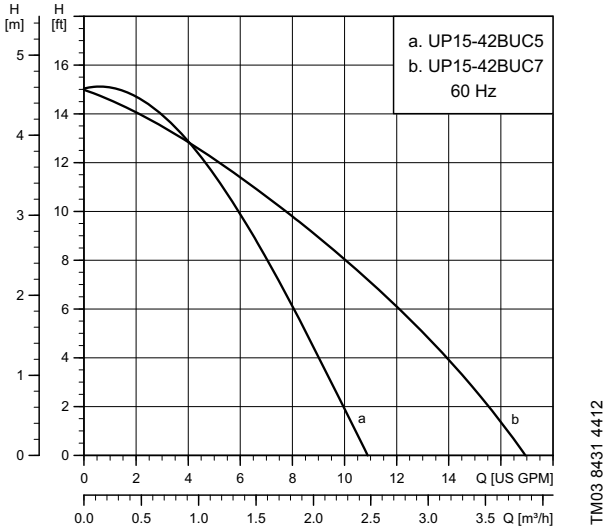

Flow range:	0-17 gpm (0 - 3.9 m^3/h)
Head range:	0-15 ft (0 - 4.6 m)
Motor:	2-pole, single-phase
Max. liquid temperature:	205 °F (96 °C)
Min. liquid temperature:	36 °F (2 °C)
Max. system pressure:	145 psi (10 bar)

Model	Volts	Amps	Watts	Hp	Capacitor
UP 15-42 BUC5	115	0.74	85	0.114	10 µF / 180 V
UP 15-42 BUC7	115	0.74	85	0.114	10 µF / 180 V

Approvals

c UL US LISTED

CLASSIFIED c UL US
WATER QUALITY
NSF/ANSI 61
Drinking Water System Components
In Accordance with NSF/ANSI 372

UP 15-42 BUC5

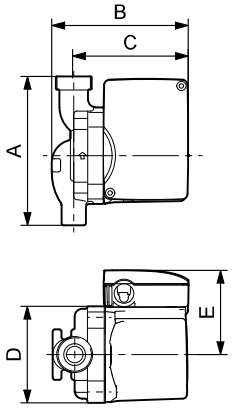

UP 15-42 BUC7

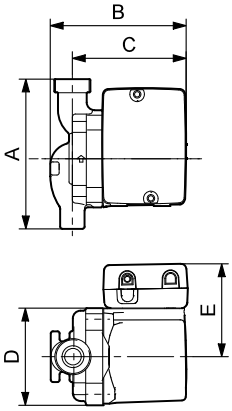

Model	Product number 115 V	Dimensions [inches (mm)]					Connection type and size	Shipping weight [lbs (kg)]
		A	B	C	D	E		
UP 15-42 BUC5	59896150	5.31 (135)	5.00 (127)	4.13 (105)	3.50 (89)	2.85 (72)	1/2" sweat	14.3 (6.5)
UP 15-42 BUC7	59896151	6.70 (170)	5.25 (133)	4.13 (105)	3.50 (89)	2.85 (72)	3/4" sweat	14.9 (6.8)

Note: Dimensions in inches unless otherwise stated.

UP 15 MixiMizer™

UP 15-42 BUC5/BUC7/MR

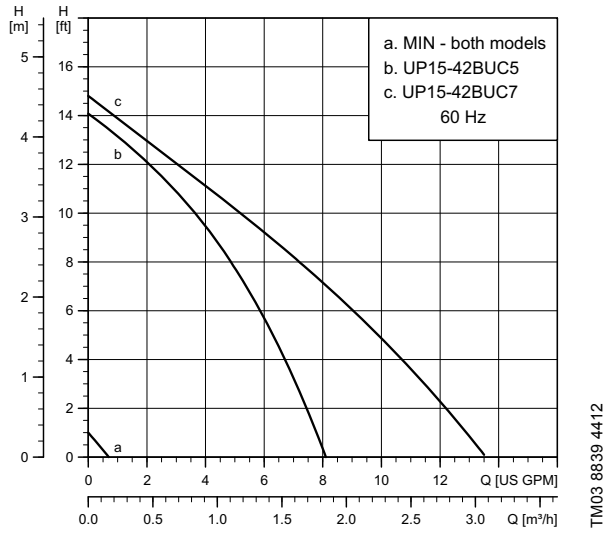

Flow range:	0 - 13.5 gpm (0 - 3.1 m^3/h)
Head range:	0-15 ft (0 - 4.6 m)
Motor:	2-pole, single-phase
Max. liquid temperature:	205 °F (96 °C)
Min. liquid temperature:	36 °F (2 °C)
Max. system pressure:	145 psi (10 bar)

Model	Volts	Amps	Watts	Hp	Capacitor
UP 15-42 BUC5/MR	115	0.74	85	0.114	10 µF / 180 V
UP 15-42 BUC7/MR	115	0.74	85	0.114	10 µF / 180 V

Approvals

c UL US LISTED

CLASSIFIED c UL US
WATER QUALITY
NSF/ANSI 61
Drinking Water System Components
In Accordance with NSF/ANSI 372

MixiMizer™ models include the following features:

- Two water temperature sensors (supply and return pipe) prewired, 8 ft (2.4 m) each
- one prewired 6 ft (1.8 m) line cord
- one outdoor air temperature sensor
- optional zone control input
- optional boiler On/Off output.

UP 15-42 BUC5/MR

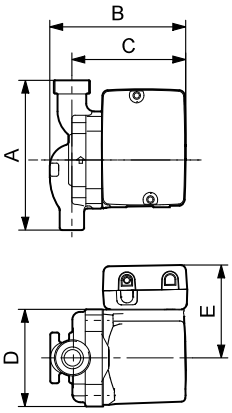

UP 15-42 BUC7/MR

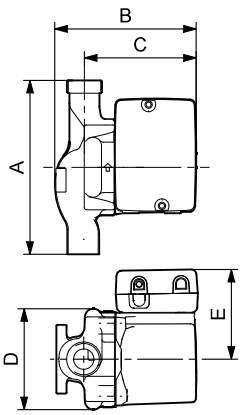

Model	Product number 115 V	Dimensions [inches (mm)]					Connection type and size	Shipping weight [lbs (kg)]
		A	B	C	D	E		
UP 15-42 BUC5/MR	59896805	5.31 (135)	5.00 (127)	4.13 (105)	3.50 (89)	3.33 (84)	1/2" sweat	14.3 (6.5)
UP 15-42 BUC7/MR	59896806	6.70 (170)	5.25 (133)	4.13 (105)	3.50 (89)	3.33 (84)	3/4" sweat	14.9 (6.8)

Note: Dimensions in inches unless otherwise stated.

UP 15-42 F/FR

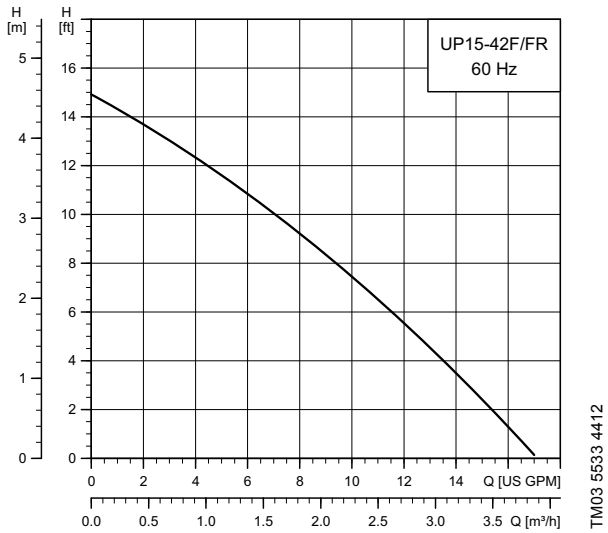

Flow range:	0-17 gpm (0 - 3.9 m^3/h)
Head range:	0-15 ft (0 - 4.6 m)
Motor:	2-pole, single-phase
Max. liquid temperature:	230 °F (110 °C)
Min. liquid temperature:	36 °F (2 °C)
Max. system pressure:	145 psi (10 bar)
Closed system	

Model	Volts	Amps	Watts	Hp	Capacitor
UP 15-42 F/FR	115	0.74	85	0.114	10 µF / 180 V
	230	0.43	95	0.128	2 µF / 400 V

Approvals

c UL US LISTED

UP 15-42 F

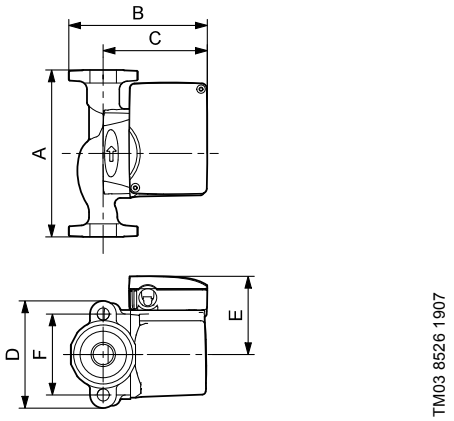

UP 15-42 FR

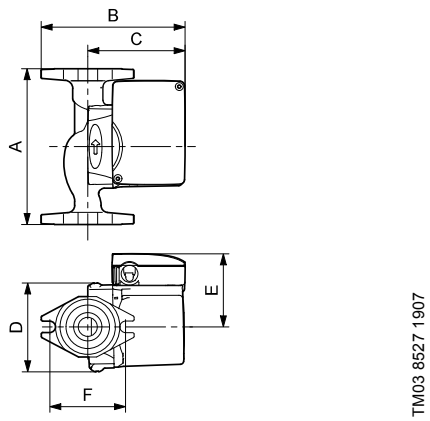

Model	Product number		Dimensions [inches (mm)]						Connection type and size	Shipping weight [lbs (kg)]
	115 V	230 V	A	B	C	D	E	F		
UP 15-42 F	59896155	59896173	6.50 (165)	5.25 (133)	4.00 (102)	4.19 (106)	3.25 (83)	3.16 (80)	GF 15/26 flange (2) 1/2" dia. bolt holes	7.3 (3.3)
UP 15-42 FR	59896167	59896274	6.50 (165)	5.94 (151)	4.00 (102)	3.75 (95)	3.25 (83)	3.16 (80)		

Note: Dimensions in inches unless otherwise stated.

UPS 15-42 F

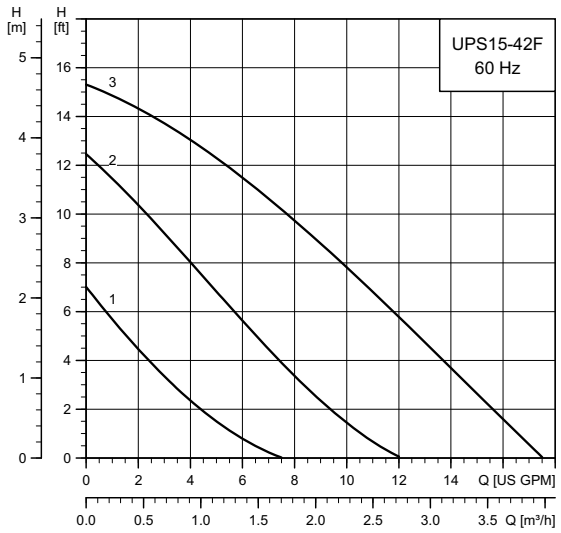

TM03 5574 4412

Flow range: 0 - 17.5 gpm (0 - 4.0 m^3/h)

Head range: 0 - 15.5 ft (0 - 4.7 m)

Motor: 2-pole, single-phase

Max. liquid temperature: 230 °F (110 °C)

Min. liquid temperature: 36 °F (2 °C)

Max. system pressure: 145 psi (10 bar)

Model	Speed	Volts	Amps	Watts	Hp	Capacitor
UPS 15-42 F	3	230	0.41	92	0.124	2 µF / 400 V
	2		0.19	40	0.054	
	1		0.14	30	0.041	

Approvals

c UL US LISTED

UPS 15-42 F

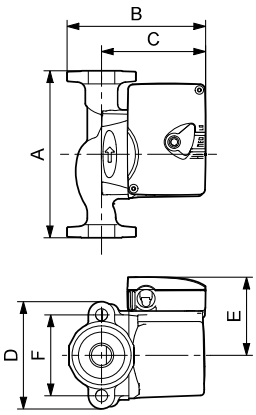

TM03 8757 2407

Model	Product number		Dimensions [inches (mm)]						Connection type and size	Shipping weight [lbs (kg)]
	115 V	230 V	A	B	C	D	E	F		
UPS 15-42 F	-	59896180	6.5 (165)	5.25 (133)	4.00 (102)	4.19 (106)	3.25 (83)	3.16 (80)	GF 15/26 flange (2) 1/2" dia. bolt holes	7.3 (3.3)

Note: Dimensions in inches unless otherwise stated.

UP 15 MixiMizer™

UP 15-42 FC/MR

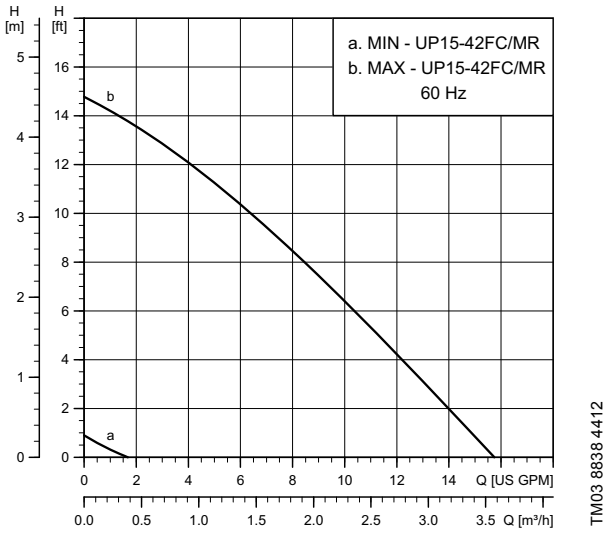

UP 15-42 FC/MR

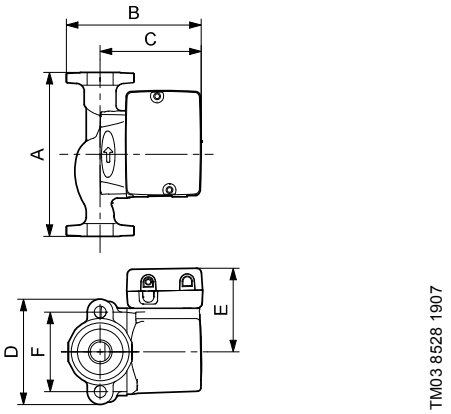

Flow range:	0-16 gpm (0 - 3.6 m^3/h)
Head range:	0-15 ft (0 - 4.6 m)
Motor:	2-pole, single-phase
Max. liquid temperature:	205 °F (96 °C)
Min. liquid temperature:	36 °F (2 °C)
Max. system pressure:	145 psi (10 bar)

Model	Volts	Amps	Watts	Hp	Capacitor
UP 15-42 FC/MR	115	0.74	85	0.114	10 µF / 180 V

Approvals

c UL US LISTED

MixiMizer™ models include the following features:

- Two water temperature sensors (supply and return pipe), prewired, 8 ft (2.4 m) each
- one prewired 6 ft (1.8 m) line cord
- one outdoor air temperature sensor
- optional zone control input
- optional boiler On/Off output.

Model	Product number 115 V	Dimensions [inches (mm)]						Connection type and size	Shipping weight [lbs (kg)]
		A	B	C	D	E	F		
UP 15-42 FC/MR	59896804	6.50 (165)	5.25 (133)	4.00 (102)	4.19 (106)	3.25 (83)	3.16 (80)	GF 15/26 flange (2) 1/2" dia. bolt holes	7.5 (3.4)

Note: Dimensions are in inches unless otherwise stated.

UP variable speed

UP 15-42 F/VS

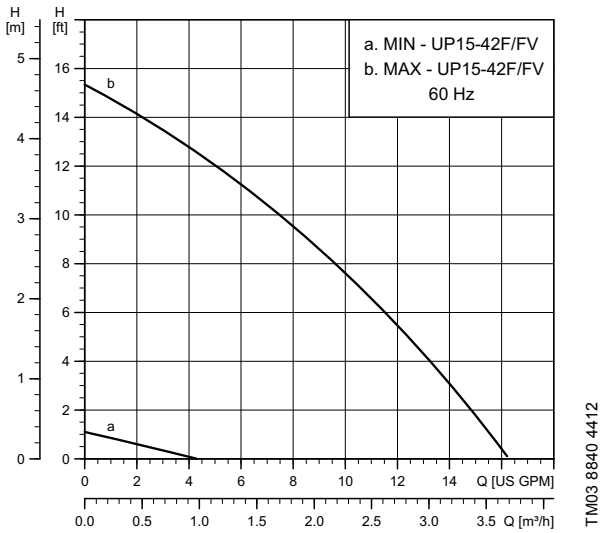

UP 15-42 F/VS

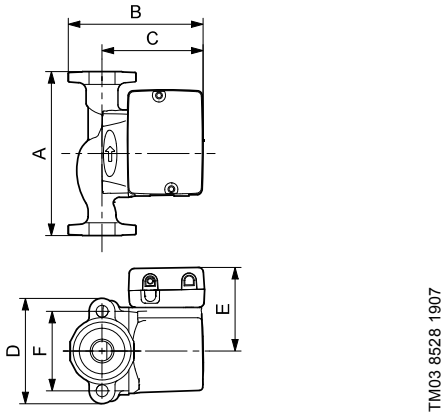

Flow range:	0-16 gpm (0 - 3.6 m^3/h)
Head range:	0 - 15.5 ft (0 - 4.7 m)
Motor:	2-pole, single-phase
Max. liquid temperature:	205 °F (96 °C)
Min. liquid temperature:	36 °F (2 °C)
Max. system pressure:	145 psi (10 bar)

Model	Volts	Amps	Watts	Hp	Capacitor
UP 15-42 F/FV	115	0.74	85	0.114	10 µF / 180 V

Approvals

c UL US LISTED

Variable-speed models include the following features:

- Three speed-control options:
1. Manual
2. Voltage: 0-10 VDC or 2-10 VDC
3. Current: 0-20 mA or 4-20 mA
- DIP switch control selection
- pump exercising
- manual offset dial
- performance indicator LEDs.

Model	Product number 115 V	Dimensions [inches (mm)]						Connection type and size	Shipping weight [lbs (kg)]
		A	B	C	D	E	F		
UP 15-42 F/VS	59896807	6.50 (165)	5.25 (133)	4.00 (102)	4.19 (106)	3.25 (83)	3.16 (80)	GF 15/26 flange (2) 1/2" dia. bolt holes	7.5 (3.4)

Note: Dimensions in inches unless otherwise stated.

UP 15-55 SUC

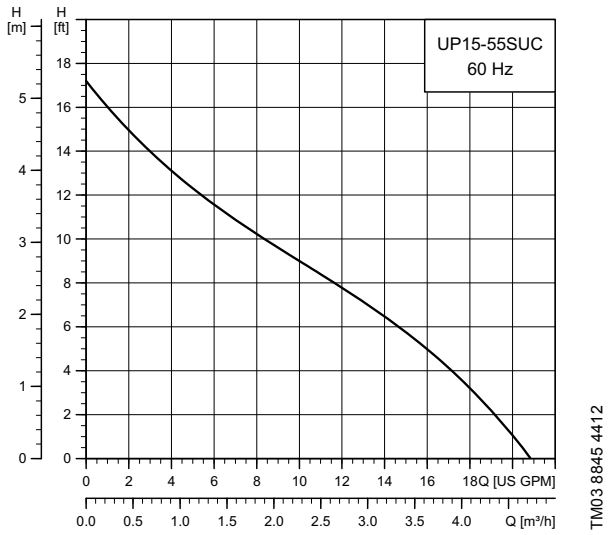

Flow range:	0 - 21.5 gpm (0 - 4.9 m^3/h)
Head range:	0-17 ft (0 - 5.2 m)
Motor:	2-pole, single-phase
Max. liquid temperature:	230 °F (110 °C)
Min. liquid temperature:	36 °F (2 °C)
Max. system pressure:	145 psi (10 bar)
Closed system	

Model	Volts	Amps	Watts	Hp	Capacitor
UP 15-55 SUC	230	0.42	97	0.130	2 µF / 400 V

Approvals

c UL US LISTED

CLASSIFIED c UL US
WATER QUALITY
NSF/ANSI 61
Drinking Water System Components
In Accordance with NSF/ANSI 372

UP 15-55 SUC

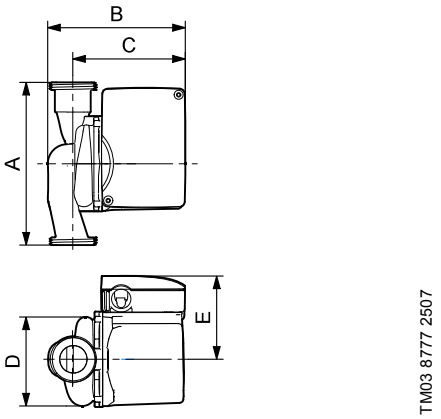

Model	Product number		Dimensions [inches (mm)]						Connection type and size	Shipping weight [lbs (kg)]
	115 V	230 V	A	B	C	D	E	F		
UP 15-55 SUC	-	59896786	5.88 (149)	5.06 (129)	4.13 (105)	3.44 (87)	2.94 (75)	5.88 (149)	GU 125	5.4 (2.5)

Note: Dimensions in inches unless otherwise stated.

UPS 15-55 SFC/SUC/TLC

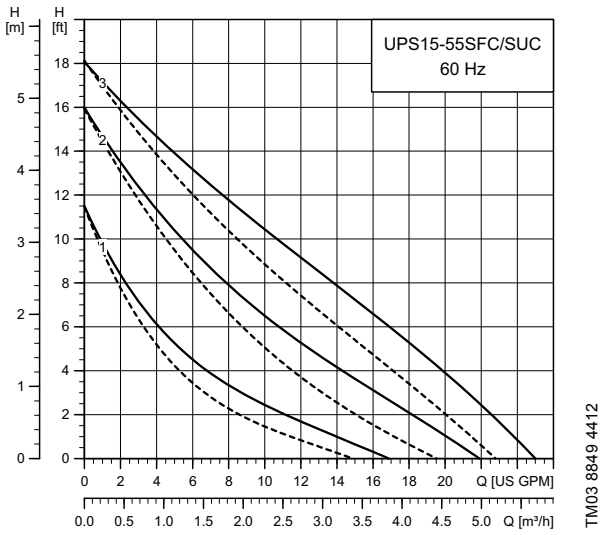

Flow range:	0-25 gpm (0 - 5.7 m^3/h)
Head range:	0-18 ft (0 - 5.5 m)
Motor:	2-pole, single-phase
Max. liquid temperature:	230 °F (110 °C)
Min. liquid temperature:	36 °F (2 °C)
Max. system pressure:	145 psi (10 bar)

Note: If the UP pump is equipped with a timer, the maximum liquid temperature is 150 °F (66 °C).

Model	Speed	Volts	Amps	Watts	Hp	Capacitor
UPS 15-55 SFC	3	115	0.75	87	0.117	10 µF / 180 V
	2		0.69	77	0.104	
	1		0.53	58	0.078	
UPS 15-55 SUC	3	115	0.69	87	0.117	
	2		0.66	74	0.100	
	1		0.31	56	0.075	

——— Without check valve

- – – - With check valve

Approvals

c UL US LISTED

CLASSIFIED c UL US
WATER QUALITY
NSF/ANSI 61
Drinking Water System Components
In Accordance with NSF/ANSI 372

UPS 15-55 SFC,
UPS 15-55 SUC/TLC

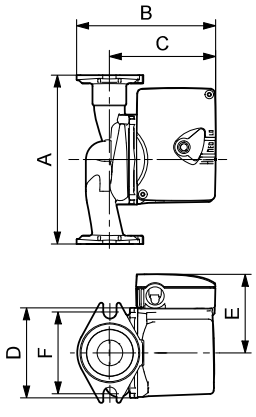

Model	Product number 115 V	Dimensions [inches (mm)]						Connection type and size	Shipping weight [lbs (kg)]
		A	B	C	D	E	F		
UPS 15-55 SFC	59896773	6.50 (165)	5.50 (140)	4.13 (105)	3.88 (99)	2.94 (75)	3.13 (80)	GF 15/26	13.2 (6.0)
UPS 15-55 SUC	59896781	5.88 (149)	5.06 (129)	4.13 (105)	3.44 (87)	2.94 (75)	-	GU 125	11.9 (5.4)
UPS 15-55 SUC/TLC	99452479	5.88 (149)	5.06 (129)	4.13 (105)	3.44 (87)	2.94 (75)	-	GU 125	13.6 (6.2)

Note: LC/TLC models have a 6 ft (1.8 m), 3-prong power cord.
Removable check valve.
Dimensions in inches unless otherwise stated.

ALPHA2

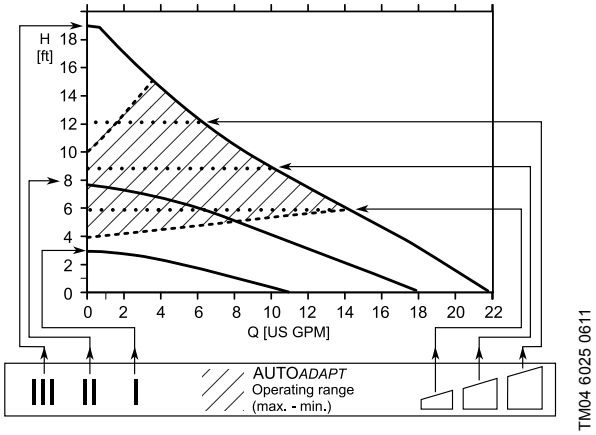

Approximate power usage

Speed setting		Min. [W]	Max. [W]
High, fixed speed	III	39	45
Medium, fixed speed	II	15	30
Low, fixed speed	I	5	8
Constant pressure		8	45
Constant pressure		14	45
Constant pressure		22	45
AUTO$_{ADAPT}$™	AUTO ADAPT	5	45

Flow range:	0 - 21.5 gpm (0 - 4.9 m^3/h)
Head range:	0 - 19 ft (0 - 5.8 m)
Motor:	4-pole, synchronous permanent magnet motor
Max. liquid temperature (see table below):	230 °F (110 °C)
Min. liquid temperature (see table below):	36 °F (2 °C)
Max. system pressure:	150 psi (10 bar)

Closed (F, FR) and open systems (SF)

Model	Volts	Amps	Watts	Hp	Capacitor
ALPHA2 15-55	115	0.65	5-45	0.007 - 0.061	-

Maximum operating pressures

Liquid temperature [°F (°C)]	Minimum inlet pressure [psi (bar)]
167 (75)	0.75 (0.05)
194 (90)	4.06 (0.28)
230 (110)	15.7 (1.08)

Maximum operating temperatures

Ambient temperature	Liquid temperature	
[°F (°C)]	Min. [°F (°C)]	Max. [°F (°C)]
+32 (0)	+36 (+2)	+230 (+110)
+50 (+10)	+50 (+10)	+230 (+110)
+68 (+20)	+68 (+20)	+230 (+110)
+86 (+30)	+86 (+30)	+230 (+110)
+95 (+35)	+95 (+35)	+194 (+90)
+104 (+40)	+104 (+40)	+158 (+70)

Note: The maximum glycol concentration with clean water is 0 % glycol at 36 °F (2 °C). A hydraulic performance change can be expected.

Approvals

Intertek
3191277
Conforms to
ANSI/UL Std. 778
Certified to
CAN/CSA Std. C22.2 No. 108

Canadian
EMC Standard:
ICES-003
This Class B digital
apparatus complies with
Canadian
ICES-003

CLASSIFIED
WATER QUALITY
Drinking Water System Component
NSF/ANSI 61
NSF/ANSI 372

ALPHA2

ALPHA2 15-55 terminal box

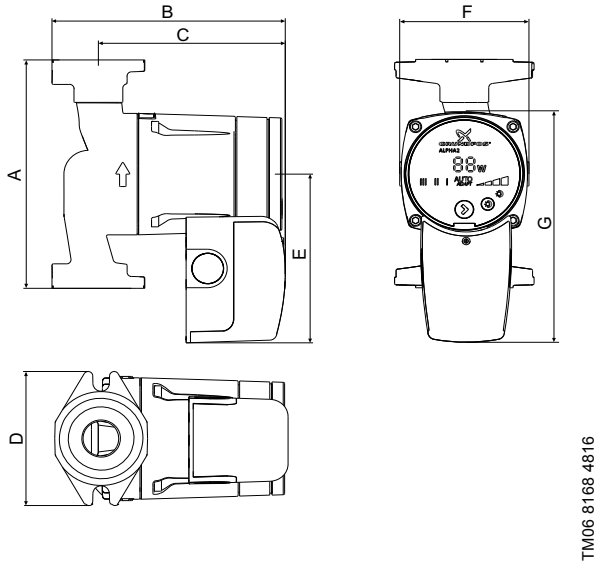

ALPHA2 15-55 line cord

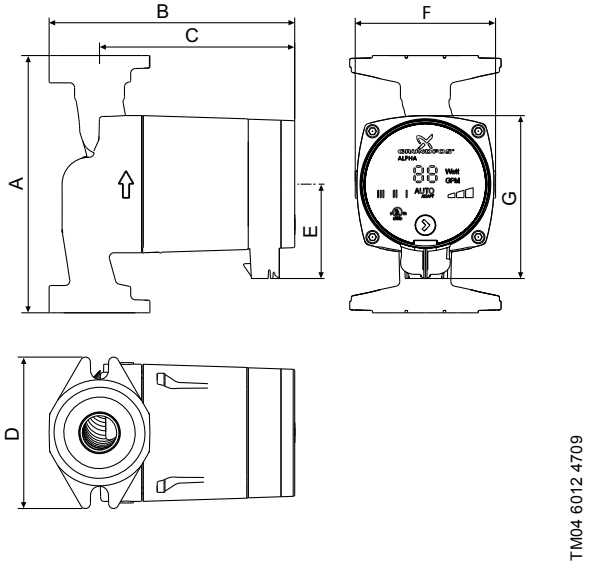

ALPHA2 15-55 FR terminal box

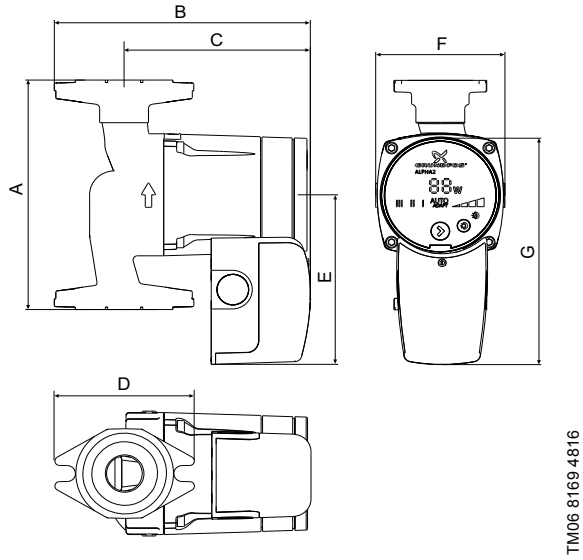

ALPHA2 15-55 FR line cord

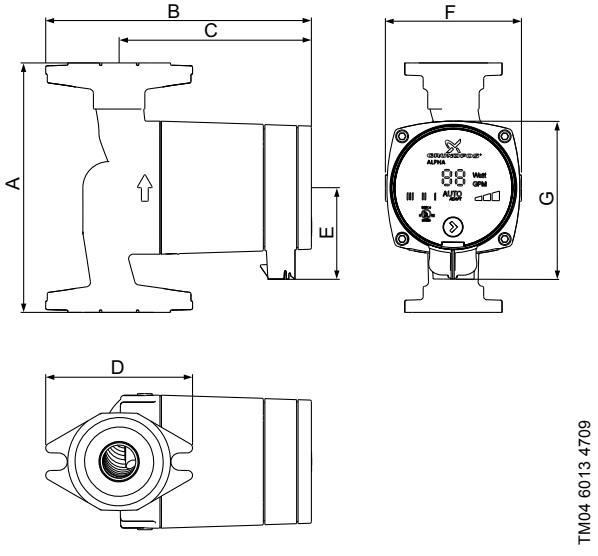

Model	Product number 115 V	Dimensions [inches (mm)]							Connection type and size	Shipping weight [lbs (kg)]
		A	B	C	D	E	F	G		
ALPHA2 15-55 F	99163903	6.50 (165)	6.38 (162)	5.12 (130)	3.82 (97)	4.80 (122)	3.56 (90)	6.42 (163)	GF 15/26 (2) 1/2" dia. bolt holes	7.2 (15.8)
ALPHA2 15-55 FR	99163932	6.50 (165)	7.01 (178)	5.12 (130)	3.82 (97)	4.80 (122)	3.56 (90)	6.42 (163)		7.1 (15.6)
ALPHA2 15-55 SF	99163937	6.50 (165)	6.38 (162)	5.12 (130)	3.82 (97)	4.80 (122)	3.56 (90)	6.42 (163)		6.1 (13.4)
ALPHA2 15-55 F/LC	99163906	6.50 (165)	6.50 (165)	4.94 (125)	4.00 (102)	2.50 (64)	3.44 (87)	4.13 (105)	GF 15/26 (2) 1/2" dia. bolt holes	7.5 (16.5)
ALPHA2 15-55 FR/LC	99163934	6.50 (165)	7.00 (178)	4.94 (125)	4.00 (102)	2.50 (64)	3.44 (87)	4.13 (105)		7.3 (16.1)
ALPHA2 15-55 SF/LC	99163972	6.50 (165)	6.50 (165)	4.94 (125)	4.00 (102)	2.50 (64)	3.44 (87)	4.13 (105)		6.3 (13.8)

Note: Dimensions are in inches unless otherwise stated.
LC models have a 6 ft (1.8 m), 3-prong power cord.

ALPHA1

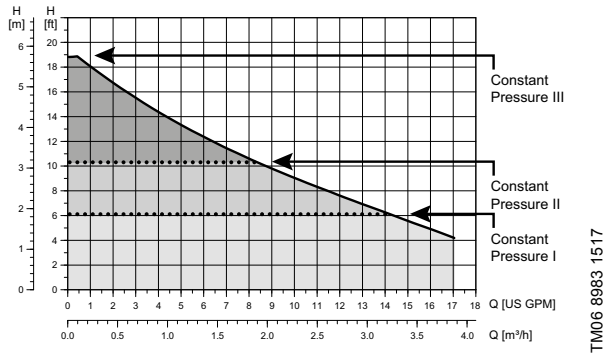

Approximate power usage

Speed setting		Min. [W]	Max. [W]
Constant pressure	I	8	45
Constant pressure	II	14	45
Constant pressure	III	22	45

Flow range:	0 - 17 gpm (0 - 3.9 m^3/h)
Head range:	0 - 19 ft (0 - 5.8 m)
Motor:	4-pole, synchronous permanent magnet motor
Max. liquid temperature:	230 °F (110 °C)
Min. liquid temperature:	36 °F (2 °C)
Max. system pressure:	150 psi (10 bar)

Closed (F, FR) and open systems (SF)

Model	Volts	Amps	Watts	Hp	Capacitor
ALPHA1 15-55	115	0.15 - 0.65	8-45	0.007 - 0.061	-

Approvals

Intertek
3191277
Conforms to
ANSI/UL Std. 778
Certified to
CAN/CSA Std. C22.2 No. 108

Canadian
EMC Standard:
ICES-003
This Class B digital
apparatus complies with
Canadian
ICES-003

CLASSIFIED
WATER QUALITY
Drinking Water System Component
NSF/ANSI 61
NSF/ANSI 372

ALPHA1

ALPHA1 15-55 terminal box

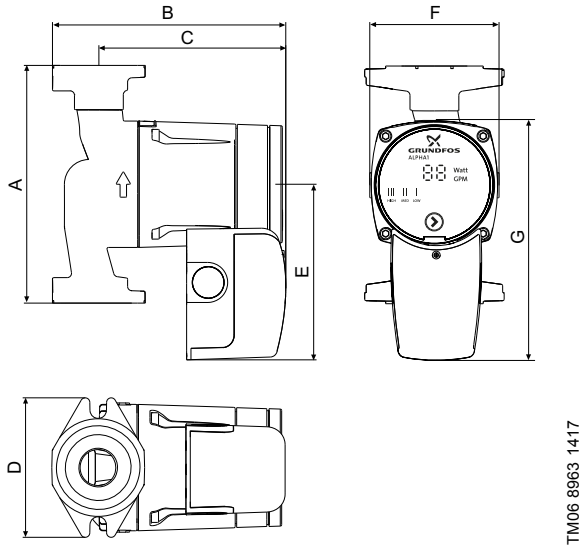

ALPHA1 15-55 line cord

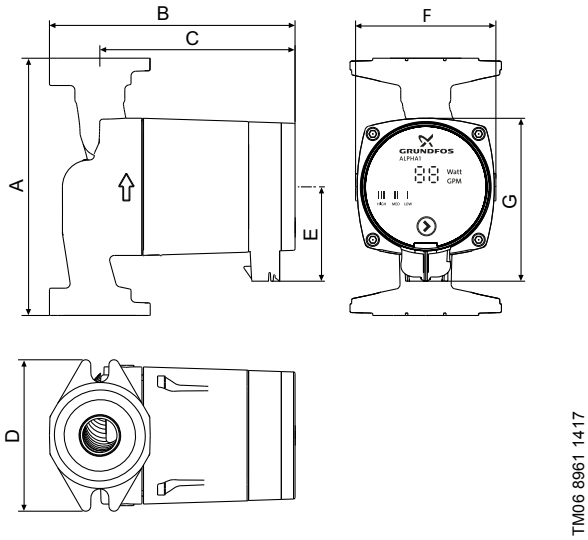

ALPHA1 15-55 FR terminal box

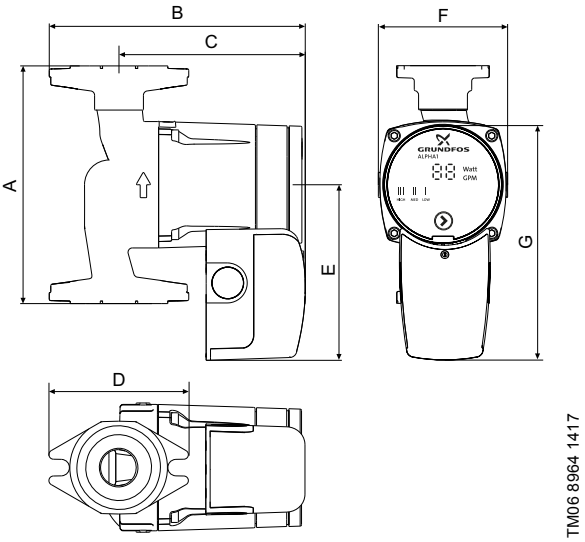

ALPHA1 15-55 FR line cord

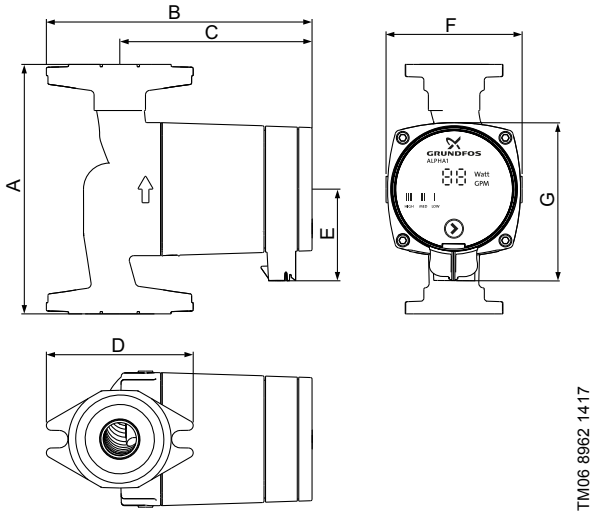

Model	Product number 115 V	Dimensions [inches (mm)]							Connection type and size	Shipping weight [lbs (kg)]
		A	B	C	D	E	F	G		
ALPHA1 15-55 F	99287256	6.50 (165)	6.38 (162)	5.12 (130)	3.82 (97)	4.80 (122)	3.56 (90)	6.42 (163)	GF 15/26 (2) 1/2" dia. bolt holes	7.2 (15.8)
ALPHA1 15-55 FR	99287259	6.50 (165)	7.01 (178)	5.12 (130)	3.82 (97)	4.80 (122)	3.56 (90)	6.42 (163)		7.1 (15.6)
ALPHA1 15-55 SF	99287262	6.50 (165)	6.38 (162)	5.12 (130)	3.82 (97)	4.80 (122)	3.56 (90)	6.42 (163)		6.1 (13.4)
ALPHA1 15-55 F/LC	99285998	6.50 (165)	6.50 (165)	4.94 (125)	4.00 (102)	2.50 (64)	3.44 (87)	4.13 (105)	GF 15/26 (2) 1/2" dia. bolt holes	7.5 (16.5)
ALPHA1 15-55 FR/LC	99287244	6.50 (165)	7.00 (178)	4.94 (125)	4.00 (102)	2.50 (64)	3.44 (87)	4.13 (105)		7.3 (16.1)
ALPHA1 15-55 SF/LC	99287250	6.50 (165)	6.50 (165)	4.94 (125)	4.00 (102)	2.50 (64)	3.44 (87)	4.13 (105)		6.3 (13.8)

Note: Dimensions are in inches unless otherwise stated.
LC models have a 6 ft (1.8 m), 3-prong power cord.

UPS 15-58 FC/FRC

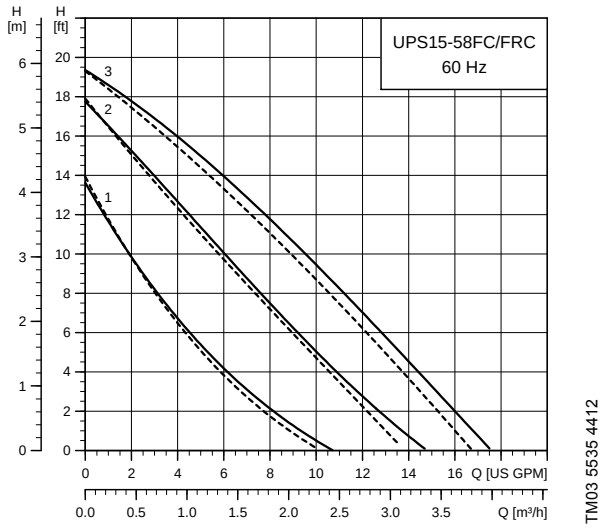

Flow range:	0-17 gpm (0 - 3.9 m^3/h)
Head range:	0 - 19.5 ft (0 - 5.9 m)
Motor:	2-pole, single-phase
Max. liquid temperature:	230 °F (110 °C)
Min. liquid temperature:	36 °F (2 °C)
Max. system pressure:	145 psi (10 bar)

Model	Speed	Volts	Amps	Watts	Hp	Capacitor
UPS 15-58 FC/FRC	3	115	0.75	87	0.117	10 µF / 180 V
	2		0.66	80	0.108	
	1		0.55	60	0.081	

——— Without check valve

- – – - With check valve

Approvals

c UL US LISTED

UPS 15-58 FC

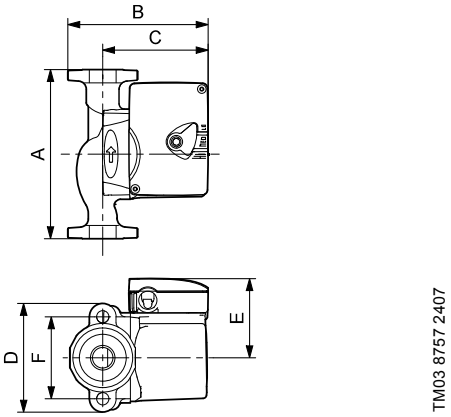

UPS 15-58 FRC

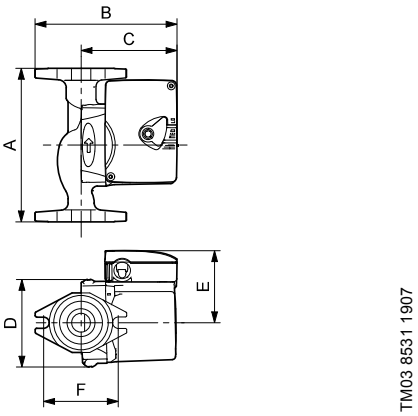

Model	Product number 115 V	Dimensions [inches (mm)]						Connection type and size	Shipping weight [lbs (kg)]
		A	B	C	D	E	F		
UPS 15-58 FC	59896341	6.50 (165)	5.25 (133)	4.00 (102)	4.19 (106)	3.00 (76)	3.16 (80)	GF 15/26 flange (2) 1/2" dia. bolt holes	7.3 (3.3)
UPS 15-58 FRC	59896343	6.50 (165)	5.25 (133)	4.00 (102)	4.19 (106)	3.00 (76)	3.16 (80)	GF 15/26 flange (2) 1/2" dia. bolt holes	7.3 (3.3)

Note: The check valve can be removed.
Dimensions in inches unless otherwise stated.

UP 15-100 F

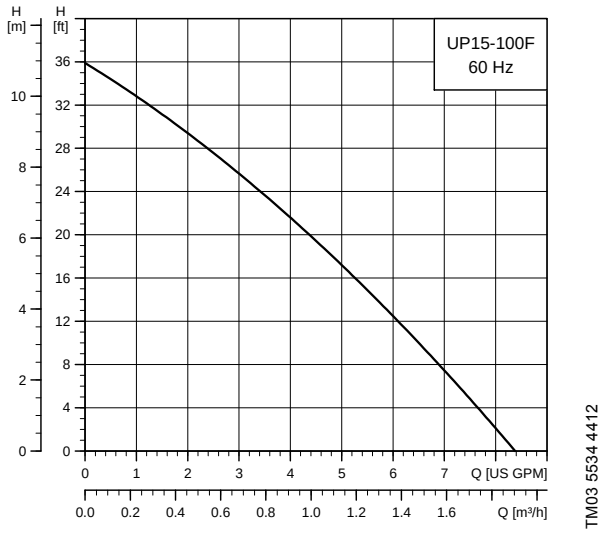

Flow range:	0 - 8.4 gpm (0 - 1.9 m^3/h)
Head range:	0-36 ft (0 - 11.0 m)
Motor:	2-pole, single-phase
Max. liquid temperature:	205 °F (96 °C)
Min. liquid temperature:	36 °F (2 °C)
Max. system pressure:	145 psi (10 bar)
Closed system	

Model	Volts	Amps	Watts	Hp	Capacitor
UP 15-100 F	115	1.1	135	0.181	12 µF / 170 V

Approvals

c UL US LISTED

UP 15-100 F

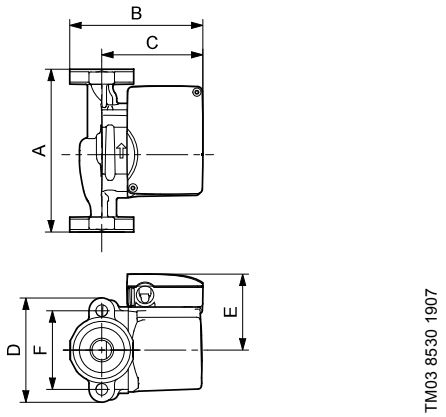

Model	Product number 115 V	Dimensions [inches (mm)]						Connection type and size	Shipping weight [lbs (kg)]
		A	B	C	D	E	F		
UP 15-100 F	59896300	6.50 (165)	5.25 (133)	4.00 (102)	4.19 (106)	3.25 (83)	3.16 (80)	GF 15/26 flange (2) 1/2" dia. bolt holes	7.3 (3.3)

Note: Dimensions in inches unless otherwise stated.

UP 26-64 F

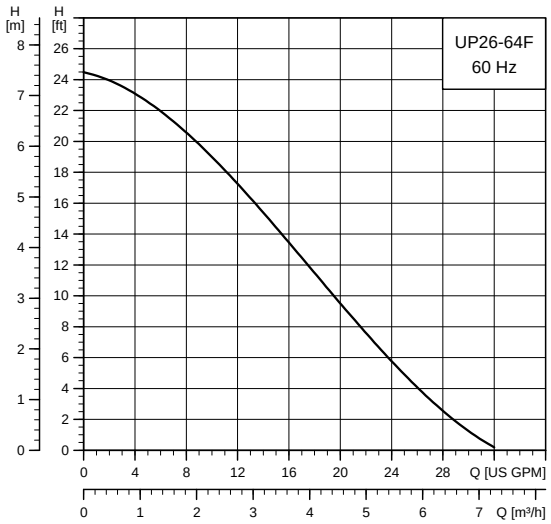

TM03 5536 4412

Flow range:	0-32 gpm (0 - 7.3 m^3/h)
Head range:	0 - 24.5 ft (0 - 5.7 m)
Motor:	2-pole, single-phase
Max. liquid temperature:	230 °F (110 °C)
Min. liquid temperature:	36 °F (2 °C)
Max. system pressure:	145 psi (10 bar)
Closed system	

Model	Volts	Amps	Watts	Hp	Capacitor
UP 26-64 F	115	1.7	185	0.248	8 µF / 180 V
	230	0.8	175	0.235	2.5 µF / 400 V

Approvals

c UL US LISTED

UP 26-64 F

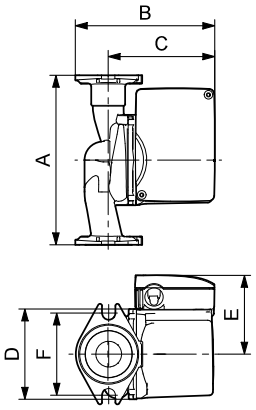

TM03 8776 2507

Model	Product number		Dimensions [inches (mm)]						Connection type and size	Shipping weight [lbs (kg)]
	115 V	230 V	A	B	C	D	E	F		
UP 26-64 F	52722330	52722327	6.50 (165)	6.38 (162)	5.06 (129)	4.13 (105)	3.50 (89)	3.16 (80)	GF 15/26 flange (2) 1/2" dia. bolt holes	11 1/4 (5.1)

Note: Dimensions in inches unless otherwise stated.

UP 26 variable speed

UP 26-64 F/VS

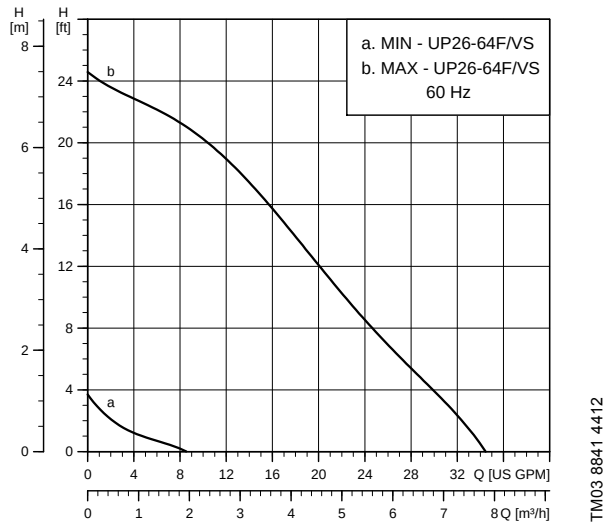

UP 26-64 F/VS

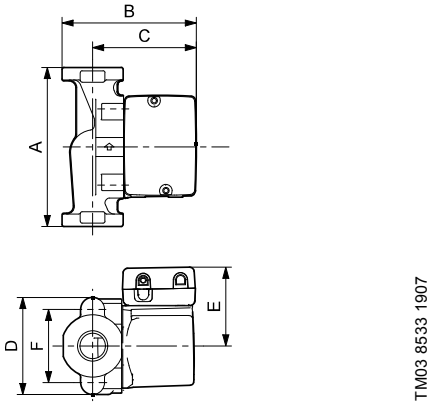

Flow range:	0-34 gpm (0 - 7.7 m^3/h)
Head range:	0 - 24.5 ft (0 - 7.5 m)
Motor:	2-pole, single-phase
Max. liquid temperature:	195 °F (91 °C)
Min. liquid temperature:	36 °F (2 °C)
Max. system pressure:	145 psi (10 bar)

Model	Volts	Amps	Watts	Hp	Capacitor
UP 26-64 F/VS	115	1.7	185	0.248	8 µF / 180 V

Approvals

c UL US LISTED

Variable-speed models include the following features:

- Three speed-control options:

1. Manual
2. Voltage: 0-10 VDC or 2-10 VDC
3. Current: 0-20 mA or 4-20 mA

- DIP switch control selection
- pump exercising
- manual offset dial
- performance indicator LEDs.

Model	Product number 115 V	Dimensions [inches (mm)]						Connection type and size	Shipping weight [lbs (kg)]
		A	B	C	D	E	F		
UP 26-64 F/VS	52722553	6.50 (165)	6.38 (162)	5.06 (129)	4.13 (105)	3.50 (89)	3.16 (80)	GF 15/26 flange (2) 1/2" dia. bolt holes	11.3 (5.1)

Note: Dimensions in inches unless otherwise stated.

UP 26-96 F/SF

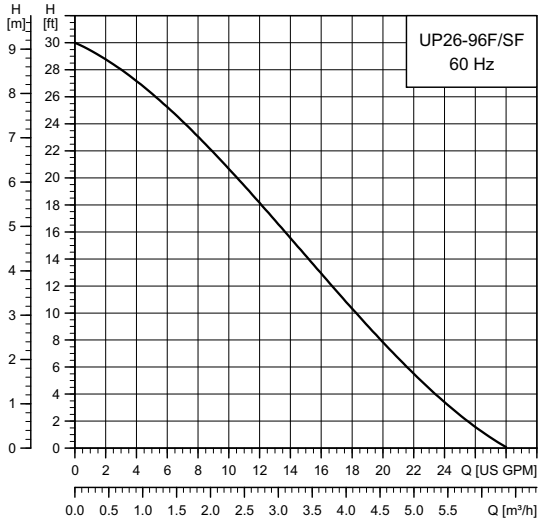

TM03 5556 4516

Flow range:	0-28 gpm (0 - 6.4 m^3/h)
Head range:	0-30 ft (0 - 9.1 m)
Motor:	2-pole, single-phase
Max. liquid temperature:	230 °F (110 °C)
Min. liquid temperature:	36 °F (2 °C)
Max. system pressure:	145 psi (10 bar)

Closed system (F) and open system (SF)

Model	Volts	Amps	Watts	Hp	Capacitor
UP 26-96 F/SF	115	1.7	205	0.275	10 µF / 180 V
	230	0.8	205	0.275	2.5 µF / 400 V

Approvals

UP 26-96 F/SF

c UL US LISTED

UP 26-96 F

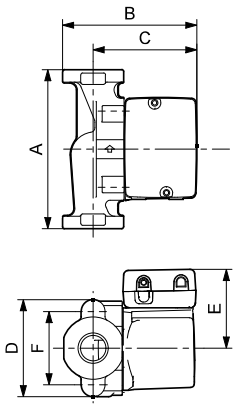

TM03 8533 1907

UP 26-96 SF

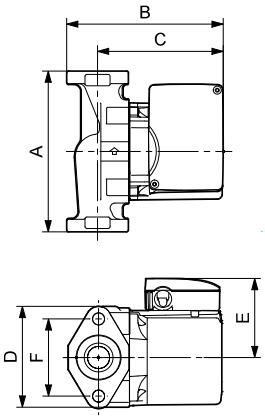

TM03 8543 1907

Model	Product number		Dimensions [inches (mm)]						Connection type and size	Shipping weight [lbs (kg)]
	115 V	230 V	A	B	C	D	E	F		
UP 26-96 F	52722341	52722338	6.50 (165)	6.38 (162)	5.06 (129)	4.13 (105)	3.50 (89)	3.16 (80)	GF 15/26 flange (2) 1/2" dia. bolt holes	11.3 (5.1)
UP 26-96 SF	98961756	98961739	6.50 (165)	6.38 (162)	5.06 (129)	4.13 (105)	3.50 (89)	3.16 (80)	GF 15/26 flange (2) 1/2" dia. bolt holes	12.5 (5.7)

Note: Dimensions in inches unless otherwise stated.

UP 26 variable speed

UP 26-96 F/VS

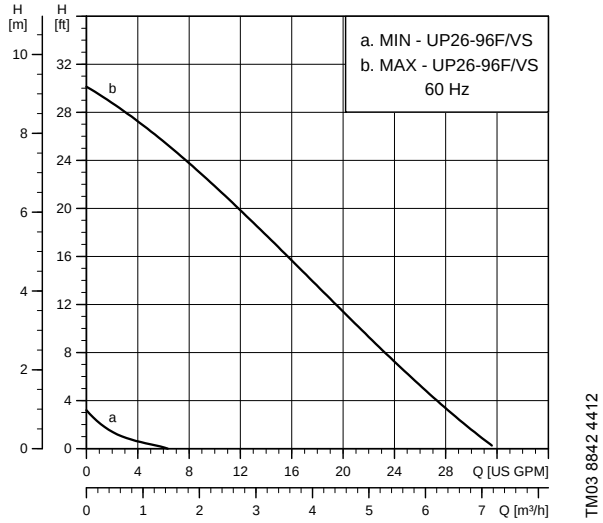

UP 26-96 F/VS

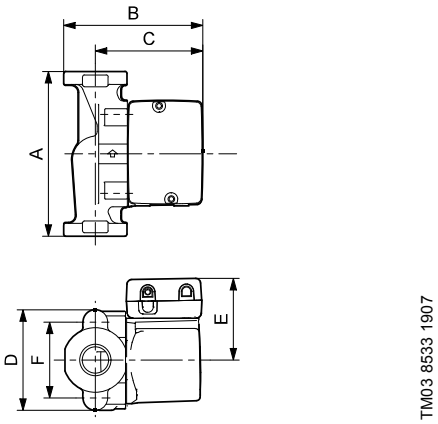

Flow range:	0-28 gpm (0 - 6.4 m^3/h)
Head range:	0-30 ft (0 - 9.1 m)
Motor:	2-pole, single-phase
Max. liquid temperature:	195 °F (91 °C)
Min. liquid temperature:	36 °F (2 °C)
Max. system pressure:	145 psi (10 bar)

Model	Volts	Amps	Watts	Hp	Capacitor
UP 26-96 F/VS	115	1.7	205	0.275	10 µF / 180 V

Approvals

c UL US LISTED

Variable-speed models include the following features:

- Three speed-control options:

1. Manual
2. Voltage: 0-10 VDC or 2-10 VDC
3. Current: 0-20 mA or 4-20 mA

- DIP switch control selection
- pump exercising
- manual offset dial
- performance indicator LEDs.

Model	Product number 115 V	Dimensions [inches (mm)]						Connection type and size	Shipping weight [lbs (kg)]
		A	B	C	D	E	F		
UP 26-96 F/VS	52722552	6.50 (165)	6.38 (162)	5.06 (129)	4.13 (105)	3.50 (89)	3.16 (80)	GF 15/26 flange (2) 1/2" dia. bolt holes	11.3 (5.1)

Note: Dimensions in inches unless otherwise stated.

UP 26-99 F/SF

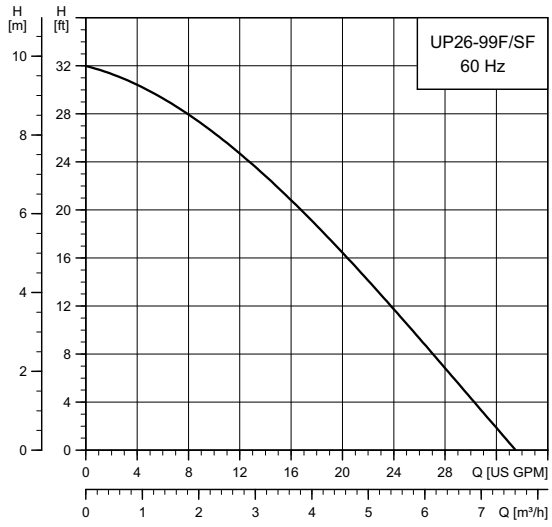

TM03 5557 4516

Flow range:	0-34 gpm (0 - 7.7 m^3/h)
Head range:	0-32 ft (0 - 9.8 m)
Motor:	2-pole, single-phase
Max. liquid temperature:	230 °F (110 °C)
Min. liquid temperature:	36 °F (2 °C)
Max. system pressure:	145 psi (10 bar)

Closed system (F) and open system (SF)

Model	Volts	Amps	Watts	Hp	Capacitor
UP 26-99 F/SF	115	2.15	245	0.329	10 µF / 180 V
	230	1.07	245	0.329	2.5 µF / 400 V

Approvals

UP 26-99 F/SF

c UL US LISTED

UP 26-99 F/SF

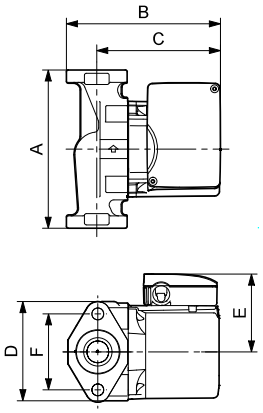

TM03 8543 2407

Model	Product number		Dimensions [inches (mm)]						Connection type and size	Shipping weight [lbs (kg)]
	115 V	230 V	A	B	C	D	E	F		
UP 26-99 F	52722355	52722351	6.50 (165)	6.38 (162)	5.06 (129)	4.13 (105)	3.50 (89)	3.16 (80)	GF 15/26 flange (2) 1/2" dia. bolt holes	12.5 (5.7)
UP 26-99 SF	98961762	98961760	6.50 (165)	6.38 (162)	5.06 (129)	4.13 (105)	3.50 (89)	3.16 (80)	GF 15/26 flange (2) 1/2" dia. bolt holes	12.5 (5.7)

Note: Dimensions in inches unless otherwise stated.

UPS 26-99 FC/SFC

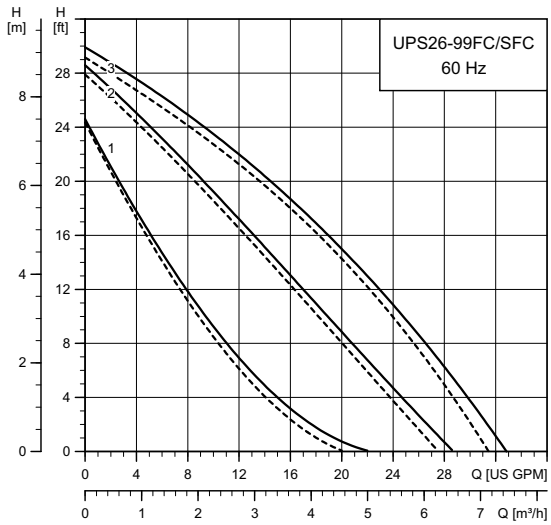

TM03 8195 4516

Flow range:	0-33 gpm (0 - 7.5 m^3/h)
Head range:	0-29 ft (0 - 8.8 m)
Motor:	2-pole, single-phase
Max. liquid temperature:	230 °F (110 °C)
Min. liquid temperature:	36 °F (2 °C)
Max. system pressure:	145 psi (10 bar)

Model	Speed	Volts	Amps	Watts	Hp	Capacitor
UPS 26-99 FC	III	115	1.8	197	0.265	20 µF / 180 V
	II		1.5	179	0.240	20 µF / 180 V
	I		1.3	150	0.202	20 µF / 180 V
UPS 26-99 FC/ SFC	III	230	0.9	196	0.263	5 µF / 400 V
	II		0.8	179	0.240	5 µF / 400 V
	I		0.7	150	0.202	5 µF / 400 V

——— Without check valve

- – – - With check valve

Approvals

UP 26-99 F/SFC

c UL US LISTED

UP 26-99 SFC

CLASSIFIED c UL US
WATER QUALITY
NSF/ANSI 61
Drinking Water System Components
In Accordance with NSF/ANSI 372

UPS 26-99 FC

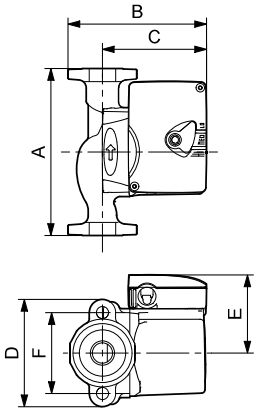

TM03 8757 2407

UPS 26-99 SFC

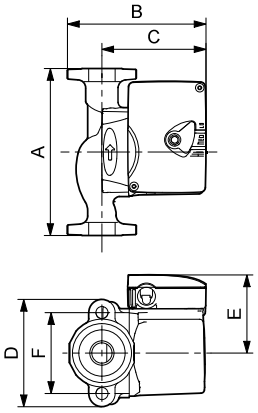

TM03 8757 2407

Model	Product number		Dimensions [inches (mm)]						Connection type and size	Shipping weight [lbs (kg)]
	115 V	230 V	A	B	C	D	E	F		
UPS 26-99 FC	52722512	52722513	6.50 (165)	6.00 (152)	4.88 (124)	3.50 (89)	3.44 (87)	3.16 (80)	GF 15/26 flange (2) 1/2" dia. bolt holes	10.3 (4.7)
UPS 26-99 SFC	98961763	98961765	6.50 (165)	6.00 (152)	4.88 (124)	3.50 (89)	3.44 (87)	3.16 (80)	GF 15/26 flange (2) 1/2" dia. bolt holes	10.3 (4.7)

Note: The check valve can be removed.
Dimensions in inches unless otherwise stated.

UP 26-116 F/SF

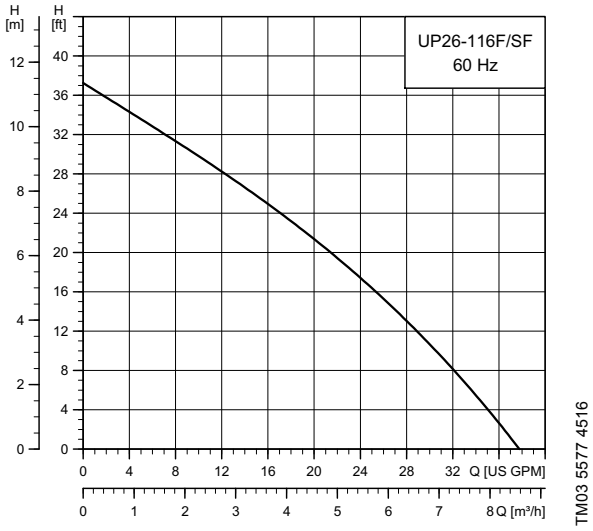

Flow range:	0-37 gpm (0 - 8.4 m^3/h)
Head range:	0-37 ft (0 - 11.3 m)
Motor:	2-pole, single-phase
Max. liquid temperature:	150 °F (65 °C)
Min. liquid temperature:	32 °F (0 °C)
Max. system pressure:	145 psi (10 bar)

Closed system (F) and open system (SF)

Model	Volts	Amps	Watts	Hp	Capacitor
UP 26-116 F/SF	230	1.8	385	0.517	2.5 µF / 400 V

Approvals

UP 26-116 F/SF

c UL US LISTED

UP 26-116 F

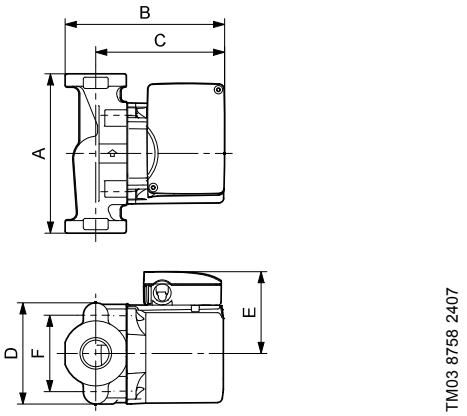

UP 26-116 SF

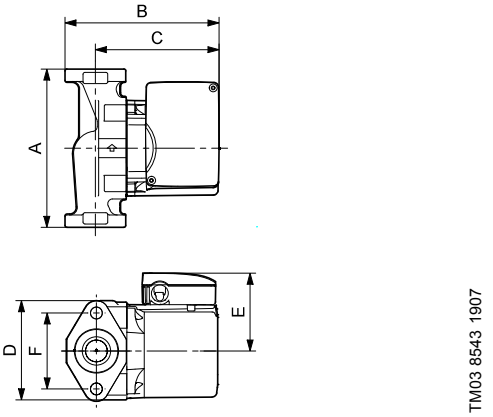

Model	Product number 230 V	Dimensions [inches (mm)]						Connection type and size	Shipping weight [lbs (kg)]
		A	B	C	D	E	F		
UP 26-116 F	52722377	6.50 (165)	6.38 (162)	5.06 (129)	4.13 (105)	3.50 (89)	3.16 (80)	GF 15/26 flange (2) 1/2" dia. bolt holes	12.5 (5.7)
UP 26-116 SF	98961766	6.50 (165)	6.38 (162)	5.06 (129)	4.13 (105)	3.50 (89)	3.16 (80)	GF 15/26 flange (2) 1/2" dia. bolt holes	12.5 (5.7)

Note: Dimensions in inches unless otherwise stated.

UP 26-120 U

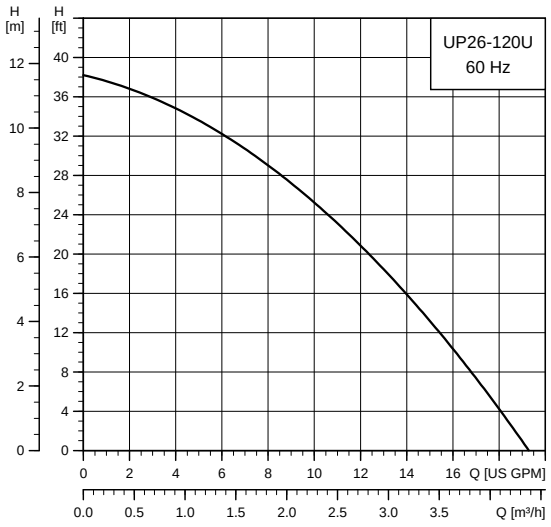

TM03 5546 4412

Flow range:	0-19 gpm (0 - 4.3 m^3/h)
Head range:	0-38 ft (0 - 11.6 m)
Motor:	2-pole, single-phase
Max. liquid temperature:	203 °F (95 °C)
Min. liquid temperature:	32 °F (0 °C)
Max. system pressure:	145 psi (10 bar)
Closed system	

Model	Volts	Amps	Watts	Hp	Capacitor
UP 26-120 U	115	2.15	215	0.289	10 µF / 180 V
	230	1.07	220	0.295	2.5 µF / 400 V

Approvals

c UL US LISTED

UP 26-120 U

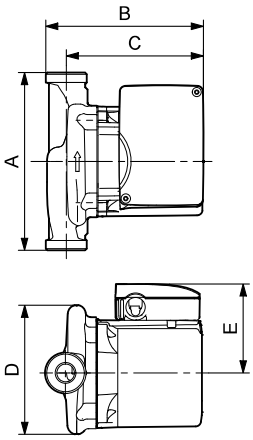

TM03 8761 2407

Model	Product number		Dimensions [inches (mm)]					Connection type and size	Shipping weight [lbs (kg)]
	115 V	230 V	A	B	C	D	E		
UP 26-120 U	52722435	52722436	7.06 (179)	5.88 (149)	5.06 (129)	4.88 (124)	3.50 (89)	GF 125 union - 1 1/4" NPSM	10.5 (4.8)

Note: Dimensions in inches unless otherwise stated.

UPS 26-150 F/SF

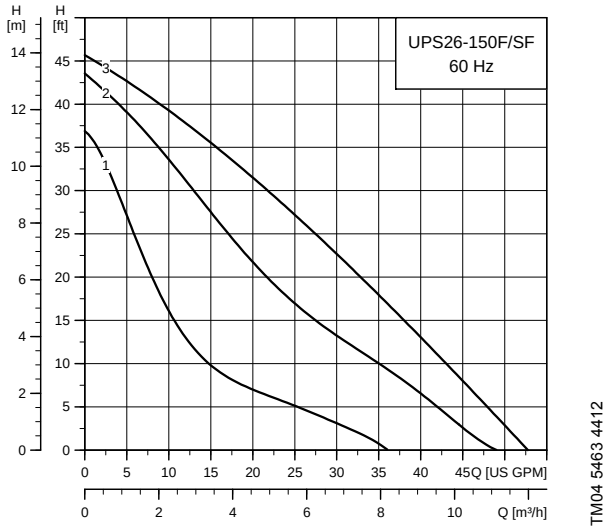

Flow range:	0-53 gpm (0-12 m^3/h)
Head range:	0-46 ft (0-14 m)
Motor:	2-pole, single-phase
Max. liquid temperature:	230 °F (110 °C)
Min. liquid temperature:	36 °F (2 °C)
Max. system pressure:	145 psi (10 bar)

Model	Speed	Volts	Amps	Watts	Hp	Capacitor
UPS 26-150 F/SF	III	115	3.5	370	0.497	40 µF / 180 V
	II		3.1	335	0.450	
	I		2.5	265	0.356	
	III	208	1.7	350	0.470	10 µF / 400 V
	II		1.5	310	0.416	
	I		1.2	250	0.336	
	III	230	1.7	370	0.497	10 µF / 400 V
	II		1.5	335	0.450	
	I		1.2	265	0.356	

Approvals

UPS 26-150 F/SF

WATER QUALITY
NSF/ANSI 61
Drinking Water System Components
In Accordance with NSF/ANSI 372

UPS 26-150 F/SF

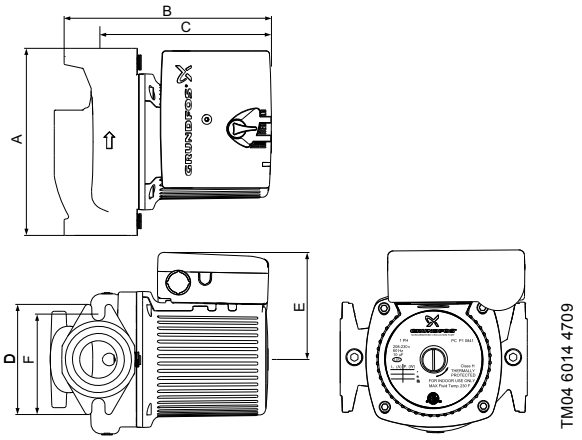

Model	Product number		Dimensions [inches (mm)]						Connection type and size	Shipping weight [lbs (kg)]
	115 V	208-230 V	A	B	C	D	E	F		
UPS 26-150 F	95906630	95906631	6.50 (165)	7.13 (181)	5.88 (149)	3.88 (98)	3.75 (95)	3.13 (79)	GF 15/26 flange (2) 1/2" dia. bolt holes	17.4 (7.9)
UPS 26-150 SF	95906632	95906633	6.50 (165)	7.13 (181)	5.88 (149)	3.88 (98)	3.75 (95)	3.13 (79)	GF 15/26 flange (2) 1/2" dia. bolt holes	17.4 (7.9)

Note: Dimensions in inches unless otherwise stated.

UP 43-44 F/BF

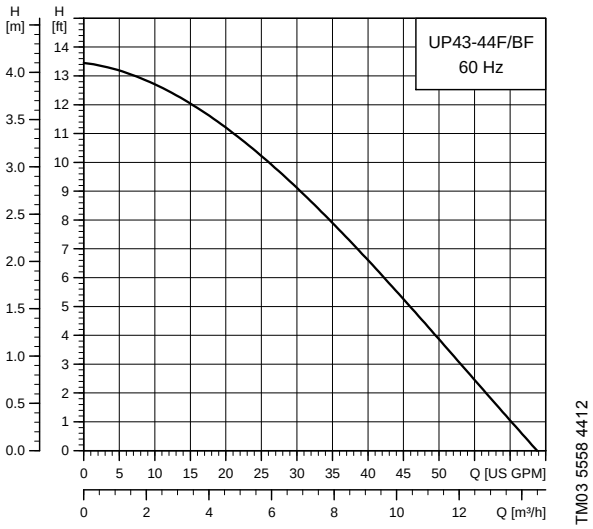

Flow range:	0-68 gpm (0 - 15.4 m^3/h)
Head range:	0 - 13.5 ft (0 - 4.1 m)
Motor:	2-pole, single-phase
Max. liquid temperature:	230 °F (110 °C)
Min. liquid temperature:	32 °F (0 °C)
Max. system pressure:	145 psi (10 bar)

Closed system (F) and open system (BF)

Model	Volts	Amps	Watts	Hp	Capacitor
UP 43-44 F/BF	115	2.15	215	0.289	10 µF / 180 V
	230	1.07	220	0.295	2.5 µF / 400 V

Approvals

UP 43-44 F/BF

c UL US LISTED

UP 43-44 BF

LOW-LEAD
IAPMO R&T
File 6591

UP 43-44 F/BF

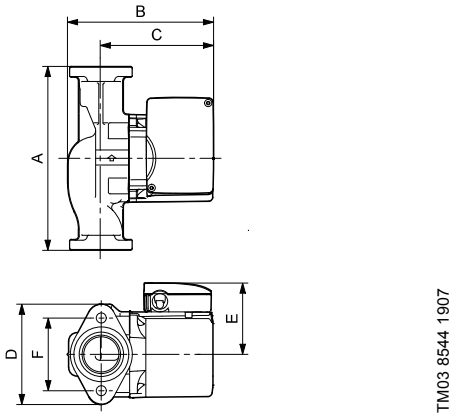

Model	Product number		Dimensions [inches (mm)]						Connection type and size	Shipping weight [lbs (kg)]
	115 V	230 V	A	B	C	D	E	F		
UP 43-44 F	52722437	52722438	8.50 (216)	6.69 (170)	5.19 (132)	4.75 (121)	3.50 (89)	3.44 (87)	GF 40/43 flange (2) 1/2" dia. bolt holes	13.5 (6.1)
UP 43-44 BF	52722439	52722440	8.50 (216)	6.69 (170)	5.19 (132)	4.75 (121)	3.50 (89)	3.44 (87)	GF 40/43 flange (2) 1/2" dia. bolt holes	15 (6.8)

Note: Dimensions in inches unless otherwise stated.

UPS 43-44 FC/BFC

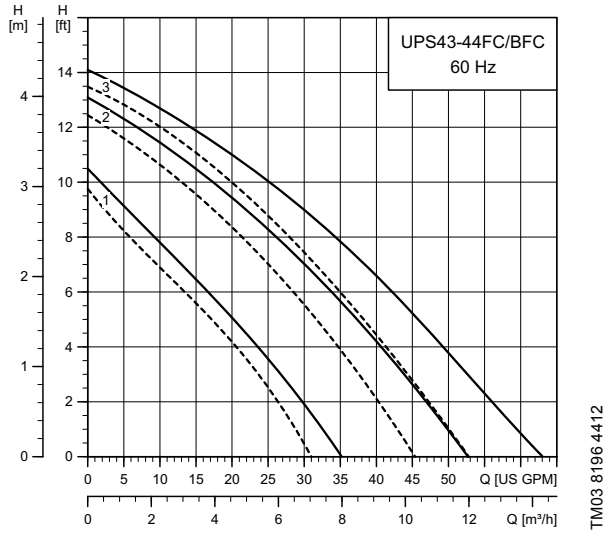

Flow range:	0-63 gpm (0 - 14.3 m^3/h)
Head range:	0-14 ft (0 - 4.3 m)
Motor:	2-pole, single-phase
Max. liquid temperature:	230 °F (110 °C)
Min. liquid temperature:	32 °F (0 °C)
Max. system pressure:	145 psi (10 bar)

Model	Speed	Volts	Amps	Watts	Hp	Capacitor
UPS 43-44 FC/BFC	III	115	1.8	203	0.273	20 µF / 180 V
	II		1.7	189	0.254	20 µF / 180 V
	I		1.4	157	0.211	20 µF / 180 V
UPS 43-44 FC/BFC	III	230	0.9	203	0.273	5 µF / 400 V
	II		0.8	190	0.255	5 µF / 400 V
	I		0.7	157	0.211	5 µF / 400 V

——— Without check valve

- – – - With check valve

Approvals

UP 43-44 FC/BFC

UP 43-44 BFC

File 6591

UPS 43-44 FC/BFC

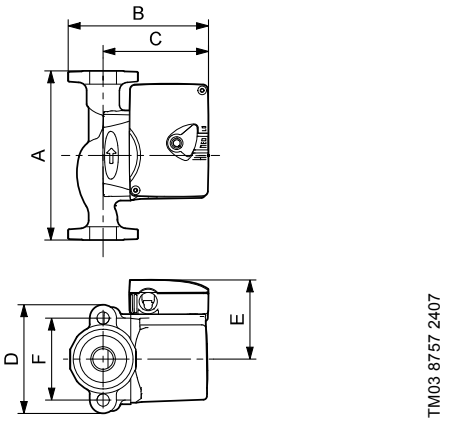

Model	Product number		Dimensions [inches (mm)]						Connection type and size	Shipping weight [lbs (kg)]
	115 V	230 V	A	B	C	D	E	F		
UPS 43-44 FC	52722514	52722515	8.50 (216)	6.69 (170)	5.13 (130)	4.75 (121)	3.19 (81)	3.44 (87)	GF 40/43 flange (2) 1/2" dia. bolt holes	13.5 (6.1)
UPS 43-44 BFC	52722520	52722521	8.50 (216)	6.69 (170)	5.13 (130)	4.75 (121)	3.19 (81)	3.44 (87)	GF 40/43 flange (2) 1/2" dia. bolt holes	13.5 (6.1)

Note: The check valve can be removed.
Dimensions in inches unless otherwise stated.

UP 43-70 F

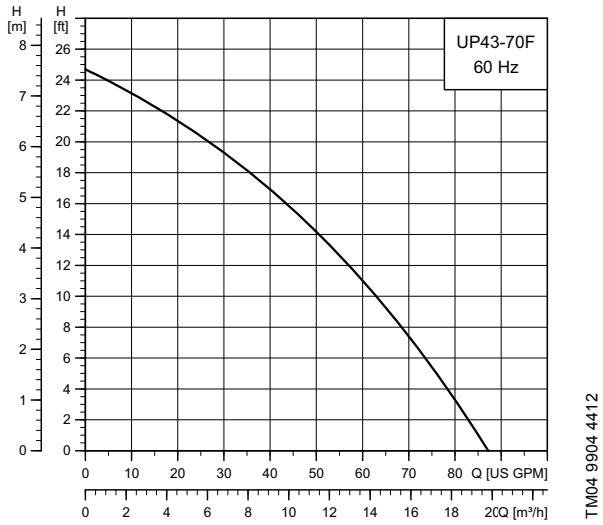

Flow range:	0-85 gpm (0 - 19.3 m^3/h)
Head range:	0 - 24.5 ft (0 - 7.5 m)
Motor:	2-pole, single-phase
Max. liquid temperature:	230 °F (110 °C)
Min. liquid temperature:	14 °F (-10 °C)
Max. system pressure:	145 psi (10 bar)
Closed system	

Model	Volts	Amps	Watts	Hp	Capacitor
UP 43-70 F	115	3.4	400	0.537	30 µF
	230	1.8	400	0.537	30 µF

UP 43-70 F

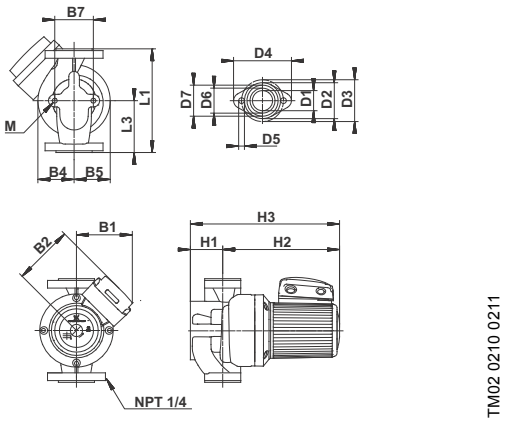

Model	Product number 115/230 V	Connection type and size	Shipping weight [lbs (kg)]
UP 43-70 F	96439644	GF 40/30 flange 1 1/2" 2-bolt with (2) 1/2" dia. holes	41

Dimensions [inches (mm)]															
L1	L3	B1	B2	B4	B5	B7	H1	H2	H3	D1	D2	D3	D4	D6	D7
8.50 (216)	4.25 (108)	5.31 (135)	5.56 (141)	2.94 (75)	2.94 (75)	3.13 (79)	2.63 (67)	9.63 (244)	12.19 (310)	1.63 (41)	8.50 (216)	4.25 (108)	5.31 (135)	5.56 (141)	2.94 (75)

Note: Dimensions in inches unless otherwise stated.

UP 43-75 F/BF

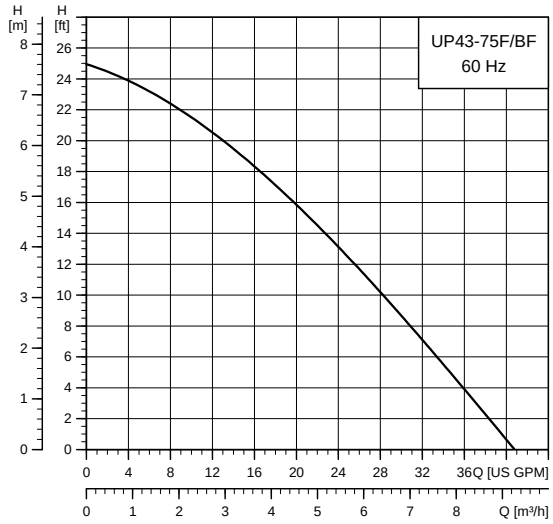

TM03 5560 4412

Flow range:	0-41 gpm (0 - 9.3 m^3/h)
Head range:	0-25 ft (0 - 7.6 m)
Motor:	2-pole, single-phase
Max. liquid temperature:	230 °F (110 °C)
Min. liquid temperature:	36 °F (2 °C)
Max. system pressure:	145 psi (10 bar)
Open system	

Model	Volts	Amps	Watts	Hp	Capacitor
UP 43-75 F/BF	115	2.15	215	0.289	10 µF / 180 V
	230	1.07	220	0.295	2.5 µF / 400 V

Approvals

UP 43-75 F/BF

UP 43-75 BF

File 6591

UP 43-75 F/BF

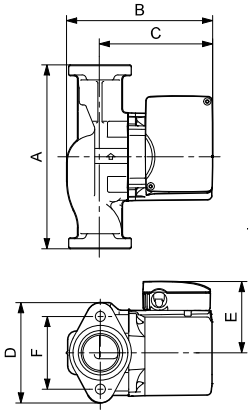

TM03 8544 1907

Model	Product number		Dimensions [inches (mm)]						Connection type and size	Shipping weight [lbs (kg)]
	115 V	230 V	A	B	C	D	E	F		
UP 43-75 F	52722373	52722372	8.50 (216)	6.69 (170)	5.19 (132)	4.75 (121)	3.50 (89)	3.44 (87)	GF 40/43 flange (2) 1/2" dia. bolt holes	13.5 (6.2)
UP 43-75 BF	52722370	52722369	8.50 (216)	6.69 (170)	5.19 (132)	4.75 (121)	3.50 (89)	3.44 (87)	GF 40/43 flange (2) 1/2" dia. bolt holes	15 (6.8)

Note: Dimensions in inches unless otherwise stated.

UPS 43-100 F/SF

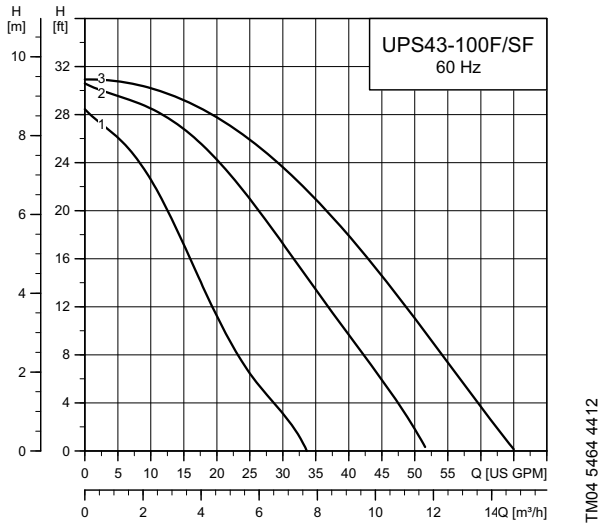

Flow range:	0-65 gpm (0 - 14.8 m^3/h)
Head range:	0-31 ft (0 - 9.5 m)
Motor:	2-pole, single-phase
Max. liquid temperature:	230 °F (110 °C)
Min. liquid temperature:	36 °F (2 °C)
Max. system pressure:	145 psi (10 bar)

Model	Speed	Volts	Amps	Watts	Hp	Capacitor
UPS 43-100 F/SF	III	115	3.5	370	0.497	40 µF / 180 V
	II		3.1	335	0.450	40 µF / 180 V
	I		2.5	265	0.356	40 µF / 180 V
	III	208	1.7	350	0.470	10 µF / 400 V
	II		1.5	310	0.416	10 µF / 400 V
	I		1.2	250	0.336	10 µF / 400 V
	III	230	1.7	370	0.497	10 µF / 400 V
	II		1.5	335	0.450	10 µF / 400 V
	I		1.2	265	0.356	10 µF / 400 V

Approvals

UPS 43-100 F/SF

UPS 43-100 SF

WATER QUALITY
NSF/ANSI 61
Drinking Water System Components
In Accordance with NSF/ANSI 372

UPS 43-100 F/SF

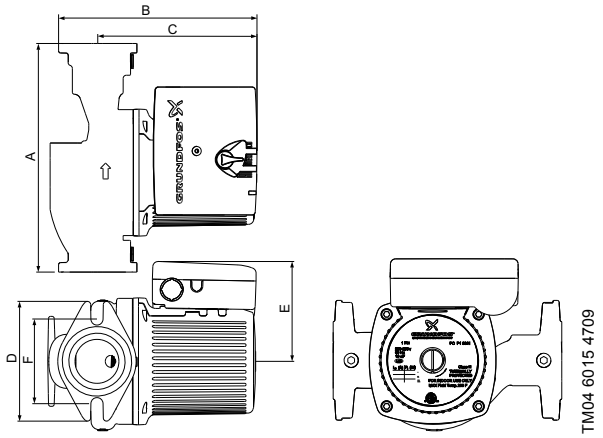

Model	Product number		Dimensions [inches (mm)]						Connection type and size	Shipping weight [lbs (kg)]
	115 V	208-230 V	A	B	C	D	E	F		
UPS 43-100 F	95906636	95906637	8.50 (216)	6.69 (170)	5.13 (130)	4.75 (121)	3.19 (81)	3.44 (87)	GF 40/43 flange (2) 1/2" dia. bolt holes	18.47 (8.4)
UPS 43-100 SF	95906638	95906639	8.50 (216)	6.69 (170)	5.13 (130)	4.75 (121)	3.19 (81)	3.44 (87)	GF 40/43 flange (2) 1/2" dia. bolt holes	18.47 (8.4)

Note: Dimensions in inches unless otherwise stated.

UP 43-110 F

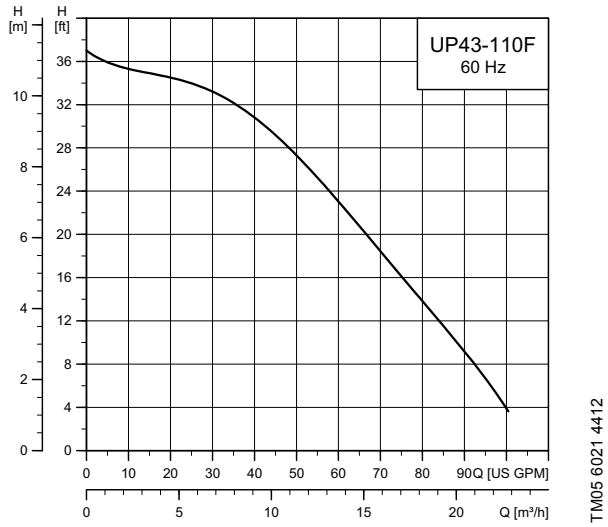

Flow range:	0-98 gpm (0 - 22.3 m^3/h)
Head range:	0-37 ft (0 - 11.3 m)
Motor:	2-pole, single-phase
Max. liquid temperature:	230 °F (110 °C)
Min. liquid temperature:	14 °F (-10 °C)
Max. system pressure:	145 psi (10 bar)
Closed system	

Model	Volts	Amps	Watts	Hp	Capacitor
UP 43-110 F	115	5.1	590	0.792	60 µF
	230	2.7	590	0.792	60 µF

Approvals

c UL US LISTED

UP 43-110 F

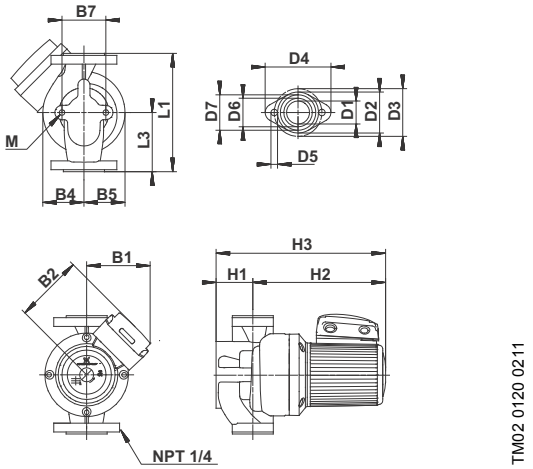

Model	Product number 115 V / 230 V	Connection type and size	Shipping weight [lbs (kg)]
UP 43-110 F	96439643	GF 40/43 flange 1 1/2"	41.2 (18.7)

Dimensions [inches (mm)]																
L1	L3	B1	B2	B4	B5	B7	H1	H2	H3	D1	D2	D3	D4	D6	D7	M
8.50 (216)	4.25 (108)	5.25 (133)	5.56 (141)	2.94 (75)	2.94 (75)	3.13 (79)	2.63 (67)	9.63 (244)	12.19 (310)	1.63 (41)	2.94 (75)	3.44 (87)	4.75 (121)	2.06 (52)	2.50 (64)	0.47 (12)

Note: Dimensions in inches unless otherwise stated.

UPS 50-44 F

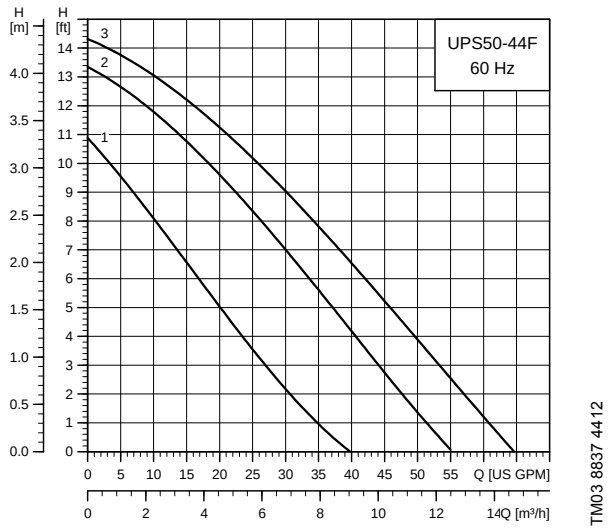

Flow range:	0-65 gpm (0 - 14.8 m^3/h)
Head range:	0 - 14.4 ft (0 - 4.4 m)
Motor:	2-pole, single-phase
Max. liquid temperature:	230 °F (110 °C)
Min. liquid temperature:	32 °F (0 °C)
Max. system pressure:	145 psi (10 bar)

Model	Speed	Volts	Amps	Watts	Hp	Capacitor
UPS 50-44 F	III	115	1.8	194	0.261	20 µF
	II		1.6	181	0.243	
	I		1.3	147	0.198	
	III	230	0.90	195	0.262	5 µF
	II		0.81	182	0.244	
	I		0.74	147	0.198	

Approvals

c UL US LISTED

UPS 50-44 F

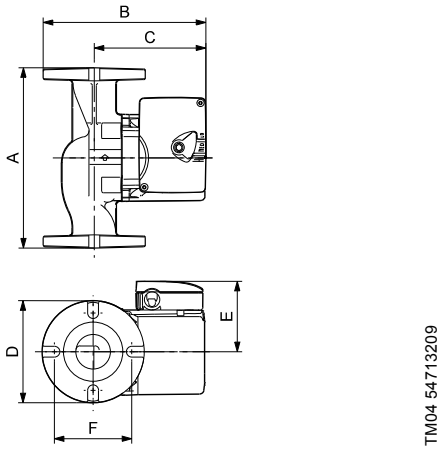

Model	Product number		Dimensions [inches (mm)]						Connection type and size	Shipping weight [lbs (kg)]
	115 V	230 V	A	B	C	D	E	F		
UPS 50-44 F	52722557	52722558	8.50 (216)	7.50 (191)	5.06 (129)	4.88 (124)	3.50 (89)	4.19 (106)	GF 50 flange (4) 1/2" dia. bolt holes	15.5 (7.0)

Note: Dimensions in inches unless otherwise stated.

UPS 50-60 F/SF

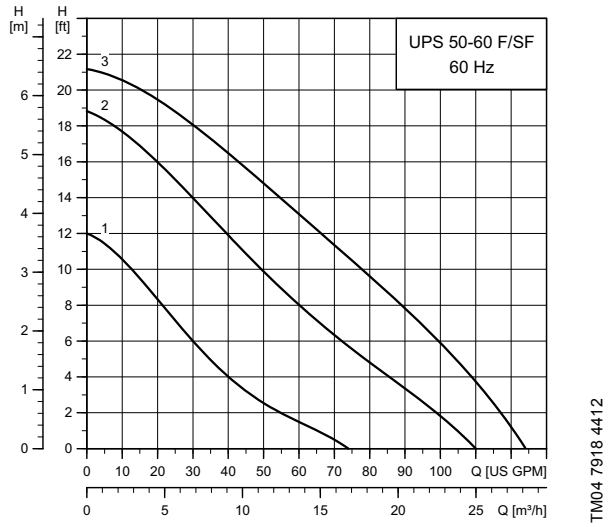

UPS 50-60 F/SF

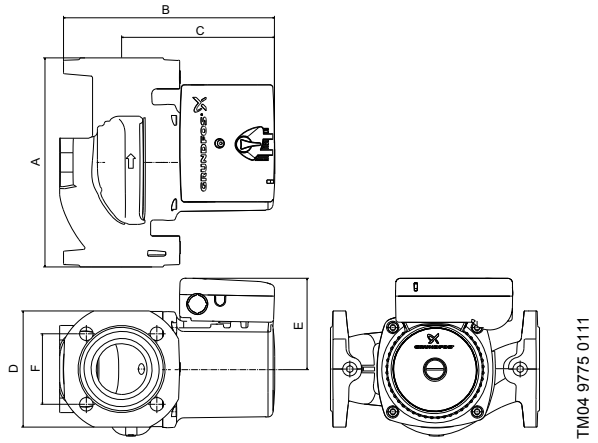

Flow range:	0-120 gpm (0 - 27.3 m^3/h)
Head range:	0-21 ft (0 - 6.4 m)
Motor:	2-pole, single-phase
Max. liquid temperature:	230 °F (110 °C)
Min. liquid temperature:	36 °F (10 °C)
Max. system pressure:	145 psi (10 bar)
Closed or open system	

Model	Speed	Volts	Amps	Watts	Hp	Capacitor
UPS 50-60 F/SF	III	115	3.6	395	0.530	40 µF / 180 V
	II		3.4	350	0.470	
	I		2.7	260	0.349	
	III	208	1.9	395	0.530	10 µF / 400 V
	II		1.7	350	0.470	
	I		1.4	290	0.389	
	III	230	1.8	395	0.530	
	II		1.7	350	0.470	
	I		1.4	260	0.349	

Approvals

UPS 50-60 F/SF

Model	Product number		Dimensions [inches (mm)]						Connection type and size	Shipping weight [lbs (kg)]
	115 V	208-230 V	A	B	C	D	E	F		
UPS 50-60 F	97523134	97523135	8.59 (216)	8.63 (219)	6.25 (159)	4.75 (121)	3.75 (95)	2.88 (73)	GF 50	20.0 (44.0)
UPS 50-60 SF	97523136	97523137	8.59 (216)	8.63 (219)	6.25 (159)	4.75 (121)	3.75 (95)	2.88 (73)		20.0 (44.0)

Note: Dimensions in inches unless otherwise stated.

UP 50-75 F

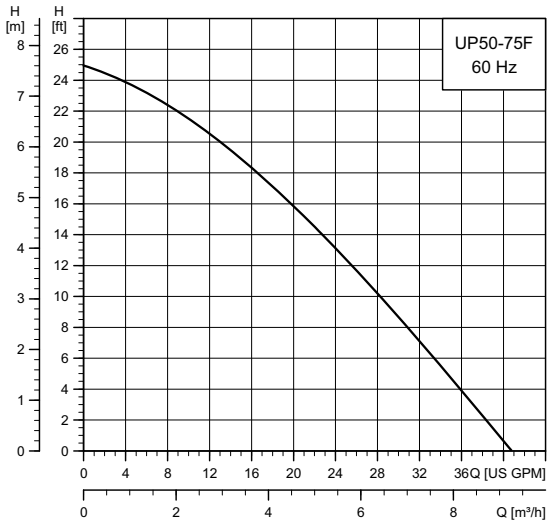

TM03 5545 4412

Flow range:	0-41 gpm (0 - 9.3 m^3/h)
Head range:	0-25 ft (0 - 7.6 m)
Motor:	2-pole, single-phase
Max. liquid temperature:	230 °F (110 °C)
Min. liquid temperature:	32 °F (0 °C)
Max. system pressure:	145 psi (10 bar)
Closed system	

Model	Volts	Amps	Watts	Hp	Capacitor
UP 50-75 F	115	2.15	215	0.289	10 µF / 180 V
	230	1.07	220	0.295	2.5 µF / 400 V

Approvals

c UL US LISTED

UP 50-75 F

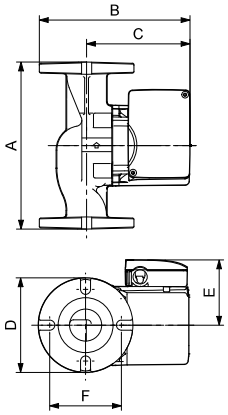

TM03 8760 2407

Model	Product number		Dimensions [inches (mm)]						Connection type and size	Shipping weight [lbs (kg)]
	115 V	230 V	A	B	C	D	E	F		
UP 50-75 F	52722352	52722353	8.50 (216)	7.50 (191)	5.06 (129)	4.88 (124)	3.50 (89)	4.19 (106)	GF 50 flange (4) 1/2" dia. bolt holes	15.5 (7.0)

Note: Dimensions in inches unless otherwise stated.

7. Accessories

Digital timer

For pumps with line cord only.

Specifications (current model):

Indoor 7-day digital timer with line cord with 3-prong plug

Supply voltage:

125 VAC, 60 Hz, 15 A, 1875 W resistive

8 A, 1000 W tungsten, 500 VA electronic ballast

120 VAC, 60 Hz, 8.3 A standard ballast

1/2 HP motor load

Contact rating: 15 A

TM07 2374 3318

Fig. 5 Grundfos digital timer for pumps with line cord

Product number	Description	Shipping weight	
		[oz.]	[kg]
99521972	Digital timer only*	4.8	0.134
99519620	Kit with digital timer, replacement line cord and lid**	15.3	0.432

* For UP pumps with line cord.
** To replace an older style timer. order the digital timer kit with replacement line cord and lid.

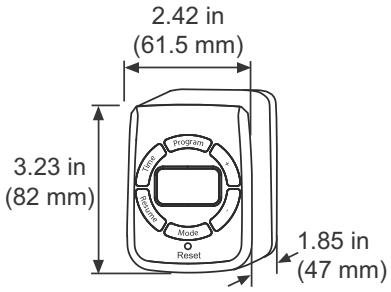

TM073759 0219

Fig. 6 Digital timer dimensions

Approvals

c UL US LISTED

Previous model timers (analog)

Specifications:

Type: 24-hour, 3-position On/Timer/Off 15-minute interval.

- Supply voltage: 120 VAC
- power consumption: 1 VA.

Switch rating: SPDT

- Resistive: 21 A/6 A
- tungsten: 1350 W.
- inductive: 1 hp @ 120 VAC; 2 hp @ 240 VAC.

Wiring connections: 1/4" quick-connects.

Installation

Indoor, wired and mounted on the UP terminal box.

Features

- Compact and contemporary design
- captive trippers are easy to set, cannot be lost
- quartz drive provides 7-day carry-over
- synchronous drive for greatest accuracy, lowest cost.

Previous model, analog timer
Date codes 9132 - 0527

Previous model, analog timer
Date codes 0528 and after

TM03 7893 0307

Fig. 7 Previous models, analog timer

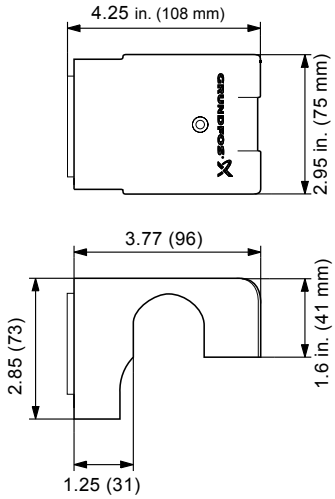

TM03 4406 1311

Fig. 8 Timer dimensions, previous version

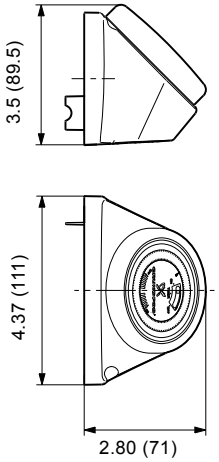

TM03 9076 1311

Fig. 9 Timer dimensions, previous version

Timer control (previous models)

Product number	Description	Shipping weight		Length		Height		Width	
		[oz]	[kg]	[inches]	[mm]	[inches]	[mm]	[inches]	[mm]
505474	24-hour programmable clock/timer for use with single-speed UP series (115 V) circulator pump* for date codes 9132-0527.	10	0.28	2.44	62	1.27	32	2.38	60
599388	24-hour programmable clock/timer for use with single-speed UP series (115 V) circulator pump* for UP 15, only date code 0528 and after.	10	0.28	2.44	62	1.27	32	2.38	60

Approvals

Aquastat

Specifications:

- Description: thermostatic switch
- type: Bi-metallic disc, snap-acting
- enclosure: environmentally sealed
- mounting:
  - – clip-on mount for 1/2" (12.7 mm) inner diameter copper tube (5/8" (15.9 mm) outer diameter)
  - – clip-on mount for 3/4" (19.1 mm) inner diameter copper tube (7/8" (22.2 mm) outer diameter).
- contact rating:
  - – 10 A @ 120 VAC, 60 Hz resistive
  - – 5 A @ 240 VAC, 60 Hz resistive.

Temperature rating

Low-temperature model:

- 105 ± 5 °F (40 ± 2 °C) – pump switches off
- 85 ± 6 °F (29 ± 3 °C) – pump switches on.

High-temperature model:

- 115 ± 5 °F (46 ± 2 °C) – pump switches off
- 105 ± 5 °F (40 ± 2 °C) – pump switches on.

Conductors:

- 2 conductors, AWG 18, 14" (356 mm)
- 12" (305 mm), black insulation, silicon or epoxy overmold
- 1/2" (12.7 mm) strip length.

Application:

- Clip-on thermostatic control for UP circulator pumps.

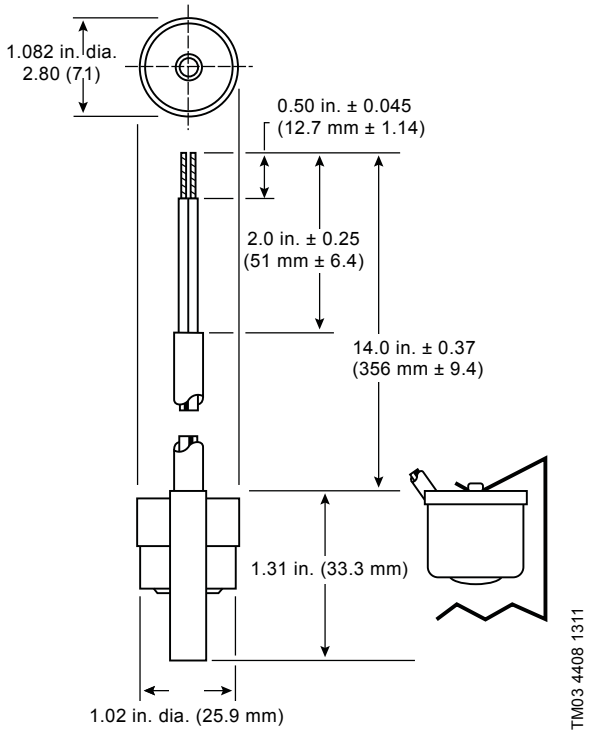

Fig. 10 Aquastat dimensions

Fig. 11 Aquastat

Approvals

Thermostatic controls

Product number	Description	Shipping wt. [lbs (kg)]
595443	Aquastat set, 1/2" (12.7 mm) clip-on mount for 5/8" (15.9 mm) outer diameter system piping size, 85-105 °F* (29.4 - 40.5 °C) (1/2" (12.7 mm) inner diameter copper tubing or 3/8" (9.7 mm) steel pipe) shielded wire with PVC jacketed cable.	1.0 (0.45)
595444	Aquastat set, 3/4" (19.1 mm) clip-on mount for 7/8" (22.2 mm) outer diameter system piping size, 85-105 °F* (29.4 - 40.5 °C) (3/4" (19.1 mm) inner diameter copper tubing or 1/2" (12.7 mm) steel pipe) shielded wire with PVC jacketed cable.	1.0 (0.45)
595656	Aquastat set, 1/2" (12.7 mm) clip-on mount for 5/8" (15.9 mm) outer diameter system piping size, 105-115 °F* (40.5 - 46.1 °C) (1/2" (12.7 mm) inner diameter copper tubing or 3/8" (9.7 mm) steel pipe) shielded wire with PVC jacketed cable	1.0 (0.45)
595657	Aquastat set, 3/4" (19.1 mm) clip-on mount for 7/8" (22.2 mm) outer diameter system piping size, 105-115 °F* (40.5 - 46.1 °C) (3/4" (19.1 mm) inner diameter copper tubing or 1/2" (12.7 mm) steel pipe) shielded wire with PVC jacketed cable.	1.0 (0.45)

Note: Dimensions in inches unless otherwise stated.

Packaged dielectric isolating valve sets

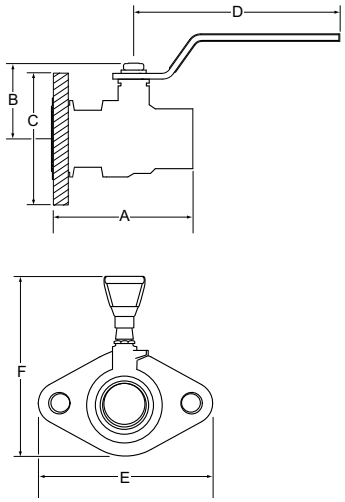

TM04 9909 0311

TM05 7999 3507

Pump connection		Pipe connection type and size		Product number	Approx. shipping weight (1 kit)	Face to face [A]	Center of port to top [B]	Flange diameter [C]	Center of valve to handle end [D]	Flange width [E]	Overall height [F]
		NPT	Sweat		[lbs (kg)]	[inches (mm)]					
GF 15/26 flange	Bronze	1/2"		96806129	2.8 (1.3)	2.84 (72)	2.00 (51)	4.19 (106)	3.45 (88)	4.17 (106)	4.00 (102)
		3/4"		96806130	6.9 (3.1)	3.05 (77)	2.25 (57)	4.19 (106)	3.75 (95)	4.17 (106)	4.00 (102)
		1"		96806131	9.9 (4.5)	3.55 (90)	2.66 (67)	4.19 (106)	4.53 (115)	4.17 (106)	4.00 (102)
		1 1/4"		96806132	10.6 (4.8)	4.03 (103)	2.97 (75)	4.19 (106)	4.55 (116)	4.17 (106)	4.00 (102)
		1 1/2"		96806133	10.8 (4.9)	4.11 (181)	2.97 (75)	4.19 (106)	4.63 (118)	4.17 (106)	4.00 (102)
			1/2"	96806134	2.9 (1.3)	2.77 (70)	2.00 (51)	4.19 (106)	3.47 (88)	4.17 (106)	4.00 (102)
			3/4"	96806135	7.7 (3.3)	3.25 (83)	2.25 (57)	4.19 (106)	3.73 (95)	4.17 (106)	4.00 (102)
			1"	96806136	9.9 (4.5)	3.86 (98)	2.66 (67)	4.19 (106)	4.50 (114)	4.17 (106)	4.00 (102)
			1 1/4"	96806137	10.6 (4.8)	4.50 (114)	2.97 (75)	4.19 (106)	4.55 (116)	4.17 (106)	4.00 (102)
			1 1/2"	96806138	10.8 (4.9)	4.58 (116)	2.97 (75)	4.19 (106)	4.56 (117)	4.17 (106)	4.00 (102)

Note: Each set contains:

Two rotating flanges, lever-handled full-ported ball valve, EPDM gaskets, dielectric sleeves.

Qty. 4, 7/16" x 1 1/4" bolts with nuts.

Dimensions in inches unless otherwise stated.

Engineering materials	
Flange	Chrome-plated steel
Valve housing	Brass
Valve ball	Chrome-plated brass
Valve seat	PTFE
Dielectric sleeve	Composite
Bolt	Chrome-plated steel
Nut	Chrome-plated steel
Gaskets	EPDM
Fluid data	
Maximum temperature	230 °F (110 °C)
Maximum pressure	150 psi (10 bar)

Approvals

LOW-LEAD IAPMO R&T

File 6591

Packaged fitting sets

GF 15/26/40/43

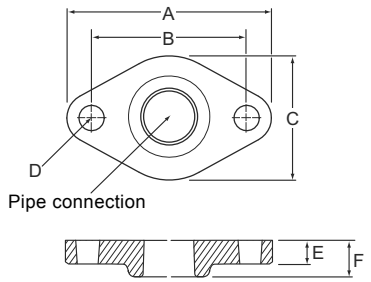

TM04 9808 0111

GF 50

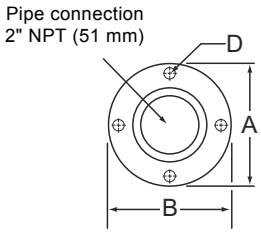

TM04 9810 0111

GU 125 union

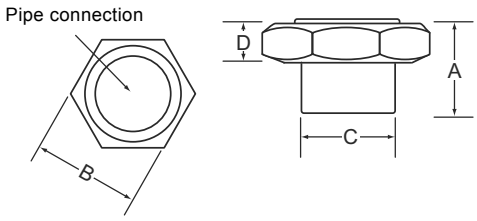

TM04 9809 0111

Isolating valve GU 125 union

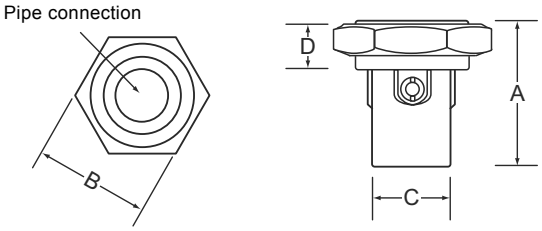

TM04 9811 0111

Material	Pump connection	Pipe connection			Product number	Dimensions (inches/mm)					
		NPT	Sweat	Compression		A	B	C	D	E	F
Cast iron	GF 15/26	3/4"			519601	4.25 (108)	3.13 (80)	2.75 (67)	0.50 (13)	0.50 (13)	0.75 (20)
		1"			519602						
		1 1/4"			519603						
		1 1/2"			519604						
	GF 40/43	1 1/2"			539605	4.75 (121)	3.50 (89)	3.00 (76)	0.50 (13)	0.50 (13)	0.75 (20)
	GF 50	2" (4-bolt flange)			96409354	5.25 (133)	4.00 (102)	-	0.50 (13)	0.50 (13)	0.75 (20)
Bronze	GF 15/26	3/4"			519651	4.25 (108)	3.13 (80)	2.75 (67)	0.50 (13)	0.50 (13)	0.75 (20)
		1"			519652						
		1 1/4"			96409356						
	GF 40/43	1 1/2"			539615	4.75 (121)	3.50 (89)	3.00 (76)	0.50 (13)	0.50 (13)	0.75 (20)
	GF 50	2" (4-bolt flange)			96409355	5.25 (133)	4.00 (102)	-	0.50 (13)	0.50 (13)	0.75 (20)
	GU 125 union	3/4"			529912	1.00 (25)	1.88 (46)	1.25 (31)	0.63 (16)	-	-
			1/2"		529913	0.75 (20)	1.88 (46)	0.75 (20)	0.63 (16)	-	-
			3/4"		529911	0.75 (20)	1.88 (46)	1.00 (25)	0.63 (16)	-	-
Isolating valves, bronze	GU 125 union	1/2"			519850	2.25 (57)	1.88 (46)	1.00 (25)	0.63 (16)	-	-
		3/4"			519852	2.25 (57)	1.88 (46)	1.25 (31)	0.63 (16)	-	-
				3/4"	519851	2.00 (51)	1.88 (46)	1.25 (31)	0.63 (16)	-	-

Notes:

GF 15/26/40/43 Flange sets to include two flanges, two gaskets, and four nuts and bolts.

GF 50 Flange sets to include two flanges, two gaskets, and eight nuts and bolts.

GU 125 union Union set to include two nuts, gaskets, and adapters.

Dimensions are in inches unless otherwise stated.

Approvals (bronze sets)

LOW-LEAD

File 6591

UP-ZV zone valves

Specifications

Grundfos UP-ZV 24 V, 2-way motorized zone valves for hydronic heating or chilled water applications.

Standard features:

- In-line removable actuator for ease of installation and service
- manual open/close lever
- sealed end switch
- silent close-off technology
- high gear ratio
- forged brass housing
- removable service cap
- high Cv rating.

Approvals

c UL US LISTED

TM04 9803 0111

Technical data

Max. percent glycol:	50 %
Fluid temperature range:	32-240 °F (0-115 °C)
Ambient temperature range:	32-104 °F (0-40 °C)
Max. humidity:	95 % non-condensing
Max. static pressure:	15 psi (1 bar) steam
	300 psi (20 bar)
Stroke time	Open: approx. 45 sec.
	Closed: approx. 10 sec.
Actuator motor	
Actuator motor:	Synchronous hysteresis
Class:	Class A
Voltage:	24 VAC + 10 %/- 10 %, Class 2
	5 watts
	7 VA
Run amps:	300 mA
In-rush:	300 mA
End (auxiliary) switch models	
Type:	Sealed
De-energized position:	Normally closed
Rating:	0.4 A (400 mA) @ 24 VAC (AC/DC)
	Class 2
Isolated:	Yes

Valves	
Valve operation:	With power: opened
	Without power: closed
	Manually opened: opened
Engineering materials	
Valve housing:	Brass
Seat:	Brass
Stem:	Stainless steel
Paddle:	EPDM
O-rings:	EPDM

UP-ZV flow characteristics

Connection size	Flow coefficient	Max. close-off ΔP
1/2" sweat	3.5 Cv (3.0 Kv)	30 psi (2 bar)
3/4" sweat	7.5 Cv (6.5 Kv)	20 psi (1.4 bar)
1" sweat	7.5 Cv (6.5 Kv)	20 psi (1.4 bar)
3/4" NPT	3.5 Cv (3.0 Kv)	30 psi (2 bar)

SWEAT MODELS

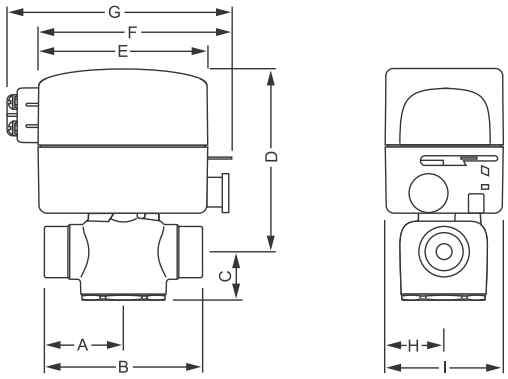

NPT MODELS

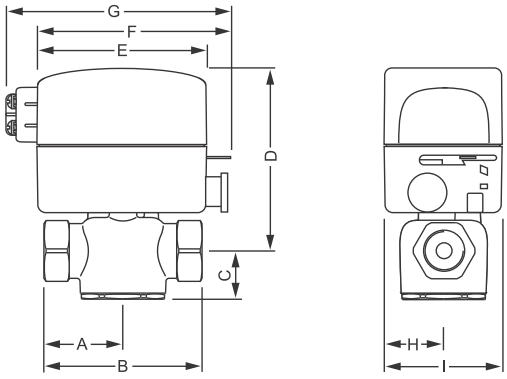

TM04 9804 0111

Connections	Dimensions [inches (mm)]								
	A	B	C	D	E	F	G	H	I
1/2" sweat	1.31 (33)	2.63 (67)	0.94 (24)	4.00 (102)	3.44 (87)	4.00 (102)	4.53 (115)	1.19 (30)	2.38 (60)
3/4" sweat	1.38 (35)								
1" sweat	1.69 (43)			4.19 (106)					
3/4" NPT	1.81 (46)								

Note: Dimensions for actuators with or without auxiliary switch.

Product number	Description
97627415	1/2" sweat, 2-way valve housing, normally closed, **with** end switch
97627416	1/2" sweat, 2-way valve housing, normally closed, **without** end switch
97627419	3/4" sweat, 2-way valve housing, normally closed, **with** end switch
97627420	3/4" sweat, 2-way valve housing, normally closed, **without** end switch
97627421	1" sweat, 2-way valve housing, normally closed, **with** end switch
97627422	1" sweat, 2-way valve housing, normally closed, **without** end switch
97627417	3/4" NPT, 2-way valve housing, normally closed, **with** end switch
97627418	3/4" NPT, 2-way valve housing, normally closed, **without** end switch

Service

Product number	Description
97627423	Actuator 24 VAC, normally closed **with** end switch
97627424	Actuator 24 VAC, normally closed **without** end switch

Replacement flange gaskets

For use with flange set	Product number	Description	Approx. shipping weight [lbs (kg)]
GF 15/26	510179	Single gasket for 1 1/4" flange	0.6 (0.25)
GF 40/43	530244	Single gasket for 1 1/2" flange	0.6 (0.25)
GF 50	96409353	Single gasket for 2" flange	0.6 (0.25)
GF 65	550097	Single gasket for 2 1/2" flange	0.6 (0.25)
GF 80	560185	Single gasket for 3" flange	0.6 (0.25)
GF 100	570008	Single gasket for 4" flange	0.6 (0.25)
GU 125	520089	Single gasket for GU 125 union	0.6 (0.25)

8. Grundfos Product Center

Online search and sizing tool to help you make the right choice.

http://product-selection.grundfos.com

"SIZING" enables you to size a pump based on entered data and selection choices.

"REPLACEMENT" enables you to find a replacement product.
Search results will include information on

- the lowest purchase price
- the lowest energy consumption
- the lowest total life cycle cost.

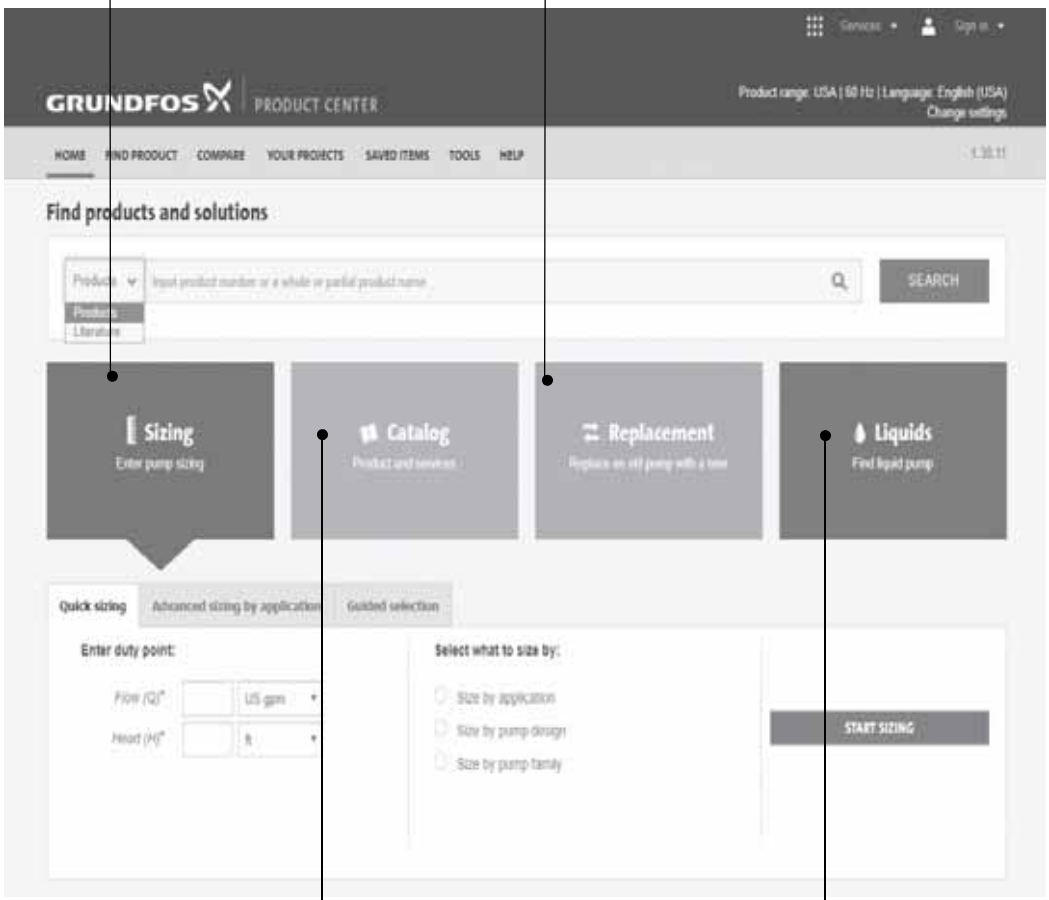

"CATALOG" gives you access to the Grundfos product catalog.

"LIQUIDS" enables you to find pumps designed for aggressive, flammable or other special liquids.

All the information you need in one place

Performance curves, technical specifications, pictures, dimensional drawings, motor curves, wiring diagrams, spare parts, service kits, 3D drawings, documents, system parts. The Product Center displays any recent and saved items — including complete projects — right on the main page.

Downloads

On the product pages, you can download Installation and Operating Instructions, Data Booklets, Service Instructions, etc. in PDF format.

be think innovate

98532861 0719

ECM: 1265481

Grundfos Kansas City
17100 West 118th Terrace
Olathe, Kansas 66061
Phone: 913-227-3400
Fax: 913-227-3500
www.grundfos.us

Grundfos Canada
2941 Brighton Road
Oakville, Ontario L6H 6C9 Canada
Phone: +1-905-829-9533
Fax: +1-905-829-9512
www.grundfos.ca

Grundfos México
Boulevard TLC No. 15
Parque Industrial Stiva Aeropuerto
C.P. 66600 Apodaca, N.L. Mexico
Phone: 011-52-81-8144 4000
Fax: 011-52-81-8144 4010
www.grundfos.mx

© Copyright Grundfos Holding A/S

The name Grundfos, the Grundfos logo, and **be think innovate** are registered trademarks owned by Grundfos Holding A/S or Grundfos A/S, Denmark. All rights reserved worldwide.

GRUNDFOS